SPARKO
WWW.SPARKORACING.COM

FX8

FORMULA EIGHT ELECTRIC

1/8 ELECTRIC PRO BUGGY KIT



INSTRUCTION MANUAL

MiT
MADE IN TAIWAN

TOOLS / MISCELLANEOUS (NOT INCLUDED)

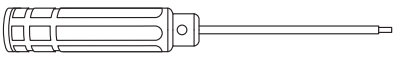

Hex Wrenches(1.5mm / 2.0mm / 2.5mm)

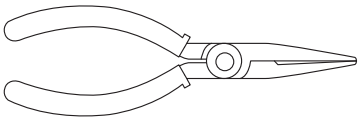

Needle Nose Pliers

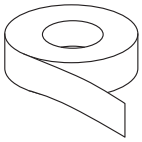

Glass or Vinyl Tape

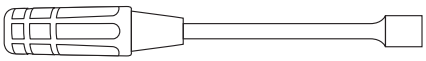

Box Wrench(5.5mm / 7mm / 10mm)

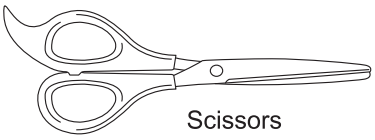

Scissors

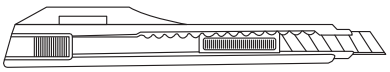

Hobby Knife

OPERATION GUIDE



Assemble both left and right sides



Assemble Front and Rear



Assemble for 2 sets



Thread Lock



Grease



Pure Silicone Oil

SAFETY PRECAUTIONS

The SPARKO F8e is a high performance radio control model which needs to be operated with caution and common sense.

The F8e Kit is not intended for children under the age of 14 without adult supervision.

SPARKO shall not be held liable for any loss or damages, whether direct, indirect, act of nature, arising from the abuse or misuse of this product or any other product required while operating this model.

- Always keep your nitro fuel in a cool area and never use near flame, sparks, or while smoking.
- Always run your model in a well ventilated area outdoors. Never run your model indoors.
- This model is controlled by your radio controller and is sometimes vulnerable to interference from many outside sources. This interference can cause a loss of control so it is necessary to operate this model in an open area to avoid personal, or property damage. Always ensure turning on your radio first.
- Keep all the parts included in the package out of reach of children.
- This model contains many fast rotating parts. Never touch them during operation.
- Follow the instructions included with your radio gear.
- Never operate your model near people or property. The speed of this model has the potential to injure people and or damage property.
- Always use original SPARKO spare parts and option parts.
- Always ensure that the buggy is in proper working condition before use.

INDEX

BAG A	Manual, Stickers and Body Shell Parts.	1
	Body Shell	26~28
	4S stander battery configuration / Battery Straps	29
BAG B	Included Items	1
BAG C	Front / Rear and Diff. Sets	2
	Center Differential Set	3
BAG D	Front Gear Box	4
	Rear Gear Box	5
BAG E	Front Lower Arms	5~6
	Front Sway Bar	6~7
BAG F	Front Upper Arms	8
BAG G	Front Caster/Steering Blocks	8~9
BAG H	Servo Saver	10
BAG I	Rear Arms	11
	Rear Sway Bar	12~13
BAG J	Rear Hubs / Upper Arm Linkage Sets	13~15
	Tall Wing Mount	15
	Tires	26
BAG K	Side Guards / Front Bumper	16
BAG L	Motor Mounts	17~18
BAG M	ESC Mount / Battery Mounts	19
BAG N	Receiver Box / Steering Servo Horn Set	20~21
	Steering Linkage Sets	22
BAG O	Front / Rear Shocks	23~24
BAG P	Wing	25
FACTORY SETUP SHEET		30
SETUP SHEET		31
SPARE PART LIST		32~33
UNIVERSAL PART LIST		34

BAG A

There are 2 packs for Bag A. One is for parts 1031-L/R and 1031-2/3. Another one is for Manual, Sticker and so on.



1023
Antenna Tube Set x 1



SS0303BK
Set Screw M3x3mm x 1



SB0308BK
Ball Screw M3x8mm x1



5001
Body Clip x 2

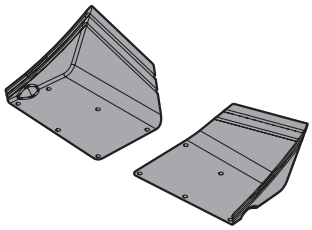

1031-L/R
Up arm wing set x1

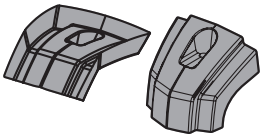

1031
Bulkhead Wing x 2

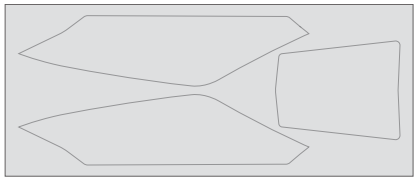

9006
Body Shell Window Masks x 1



9009
Hook & Loop Battery Straps for 14.8V x 2



9004-BK
Body Sticker-Black and White



9005-BK
Wing Sticker-Black and White

BAG B

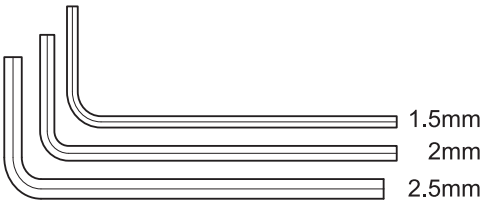

L Shape Hex wrench

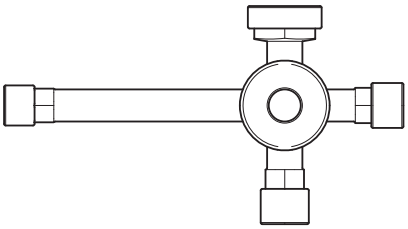

Glow plug wrench

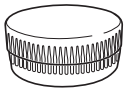

Grease

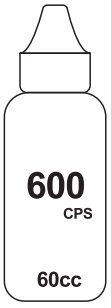

Air Filter Oil



Air Filter Oil



Air Filter Oil

BAG C

5021
Pin M2.2x9.8mm x 4

2001
Differential O-Rings x 4

WO051230
Differential Shim
5x12x0.3mm x 4

BO081605
Ball Bearing
8x16x5mm x 4

SF0310BK
Flat Screw M3x10mm x 8

5020
Differential Cross Pins x 4

WO0351020
Differential Shim
3.5x10x0.2mm x 8

1 F/R x2

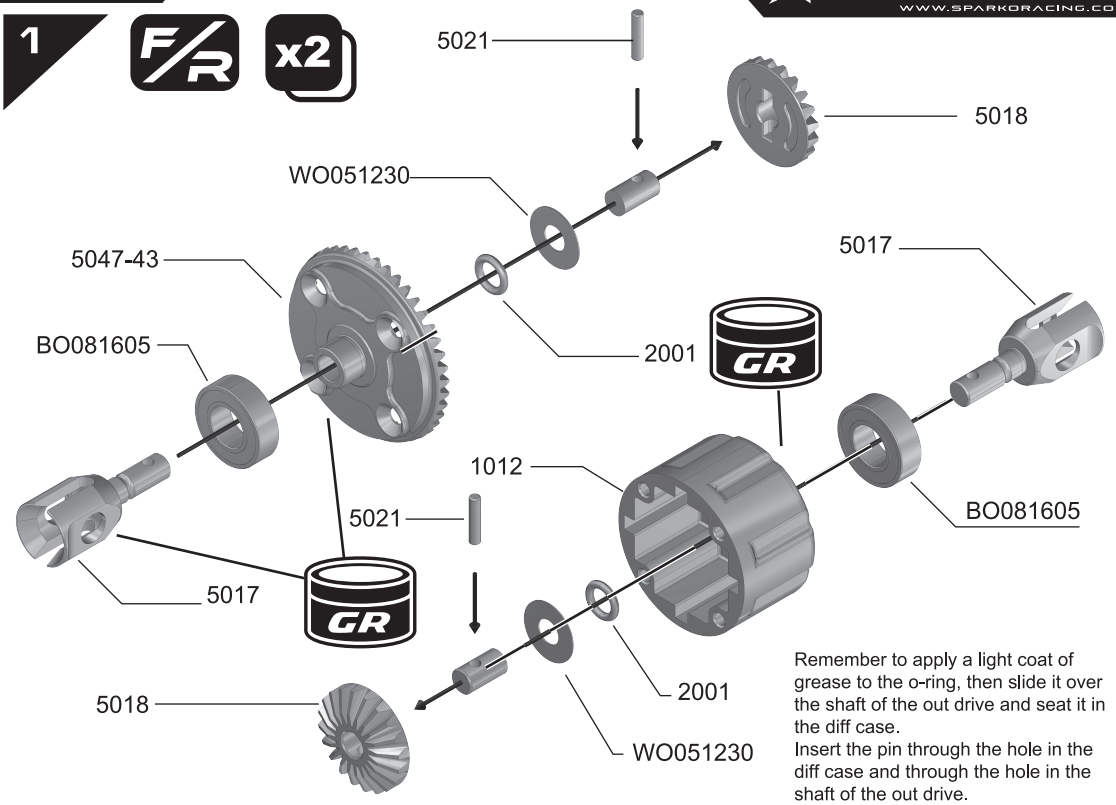

Remember to apply a light coat of grease to the o-ring, then slide it over the shaft of the out drive and seat it in the diff case.
Insert the pin through the hole in the diff case and through the hole in the shaft of the out drive.

2 F/R x2

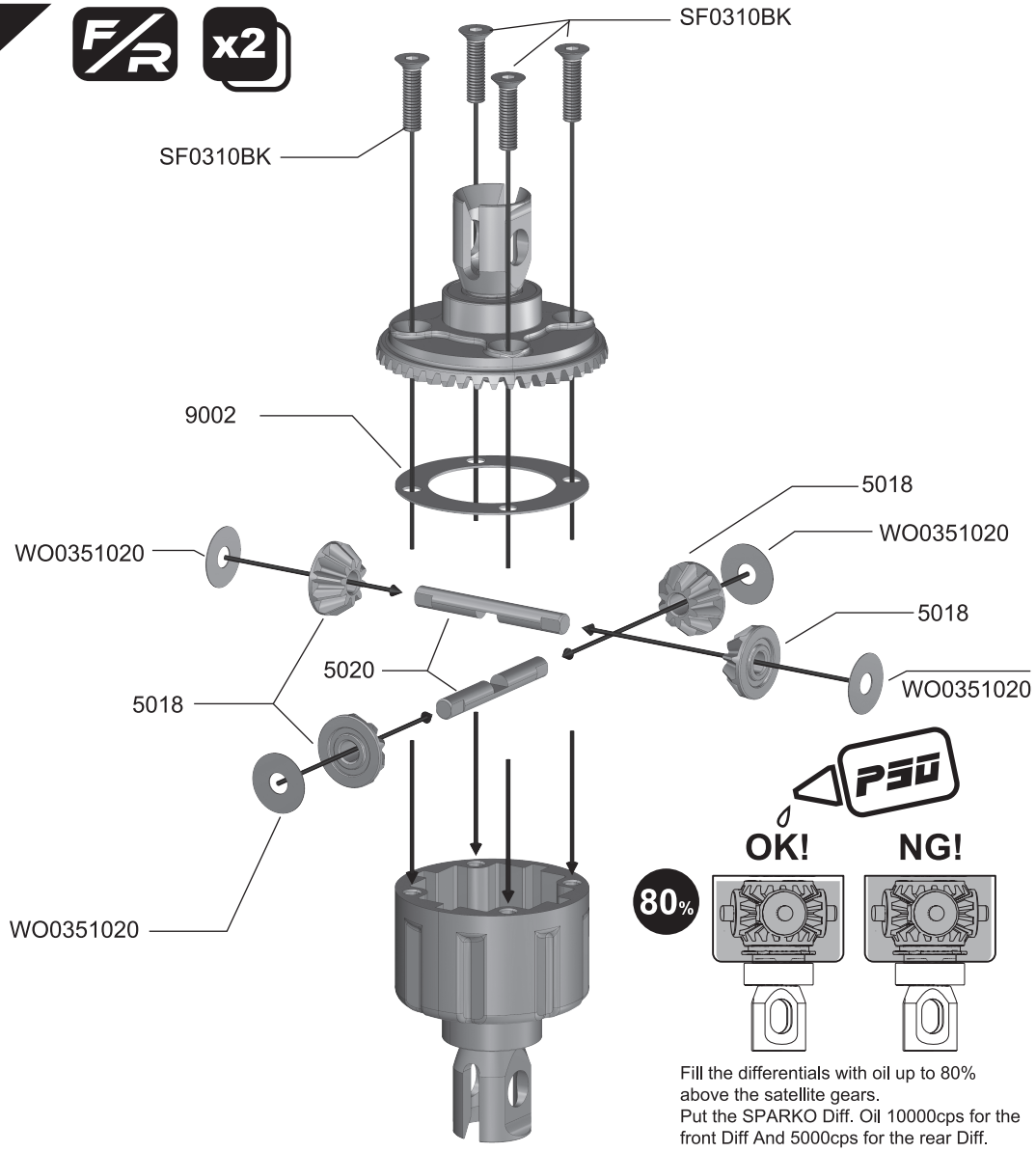

Fill the differentials with oil up to 80% above the satellite gears.
Put the SPARKO Diff. Oil 10000cps for the front Diff And 5000cps for the rear Diff.

BAG C



5021
Pin M2.2x9.8mm x 2



2001
Differential O-Rings x 2

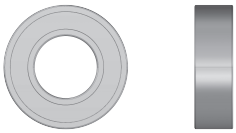

BO081605
Ball Bearing 8x16x5mm x 2



WO051230
Differential Shim 5x12x0.3mm x2



SF0312BK
Flat Screw M3x12mm x 4



5020
Differential Cross Pins x 2



WO0351020
Differential Shim
3.5x10x0.2mm x 4

3

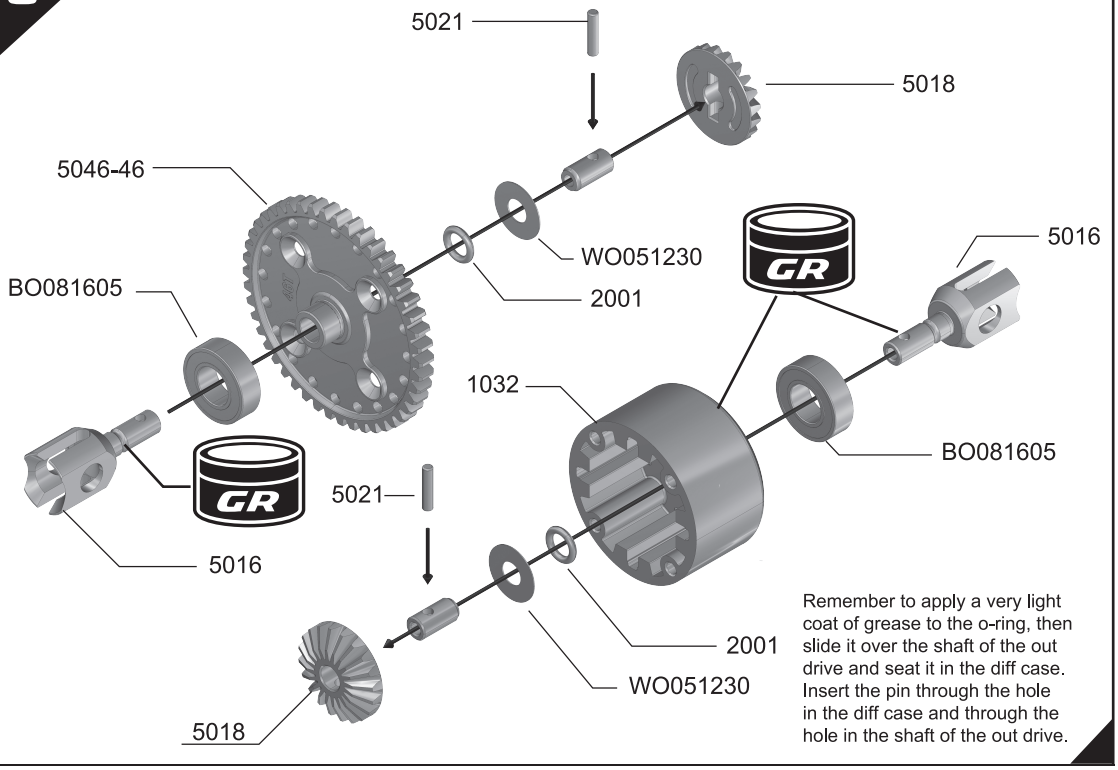

Remember to apply a very light coat of grease to the o-ring, then slide it over the shaft of the out drive and seat it in the diff case. Insert the pin through the hole in the diff case and through the hole in the shaft of the out drive.

4

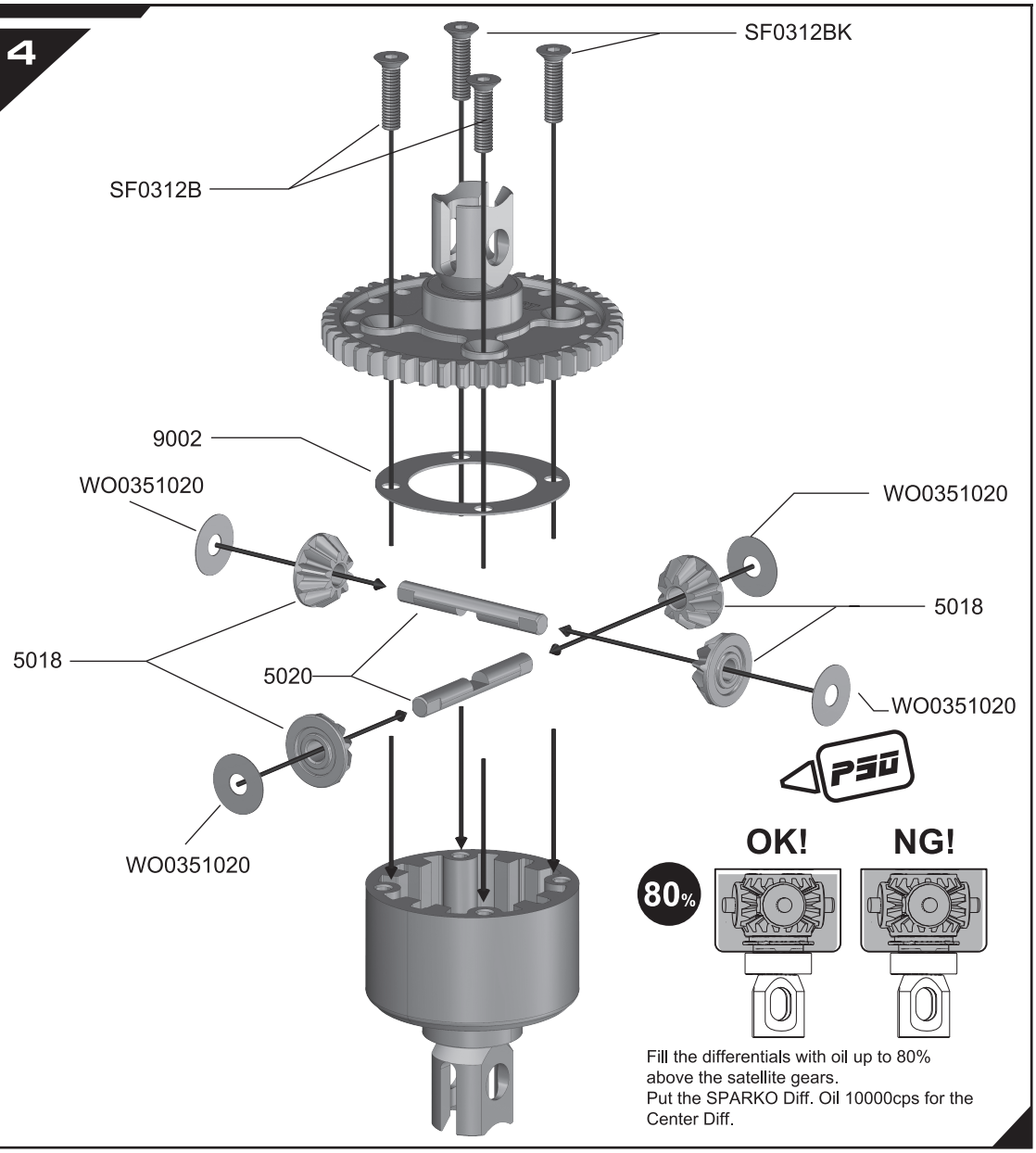

Fill the differentials with oil up to 80% above the satellite gears.
Put the SPARKO Diff. Oil 10000cps for the Center Diff.

BAG D

5 FRONT

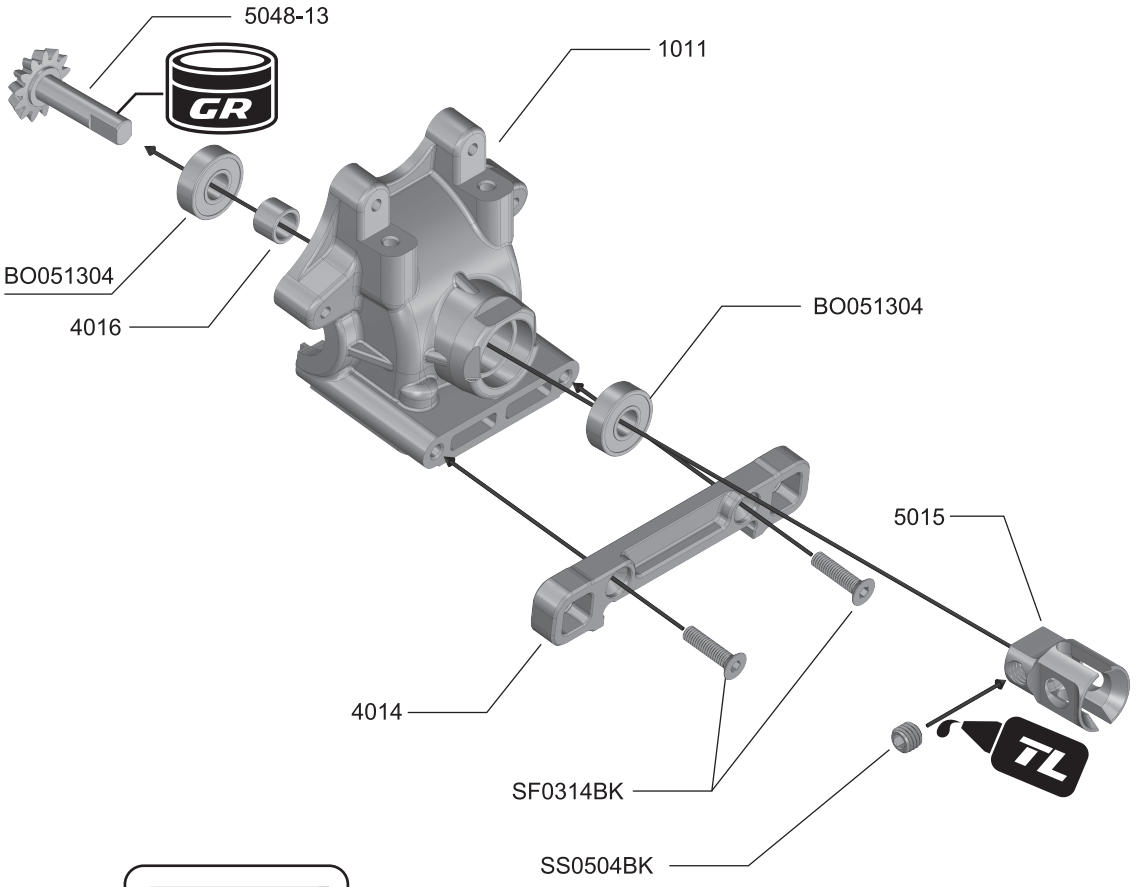

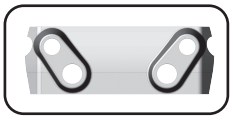

⚠ Keep part 1011 (Sway Bar Cover) for next step

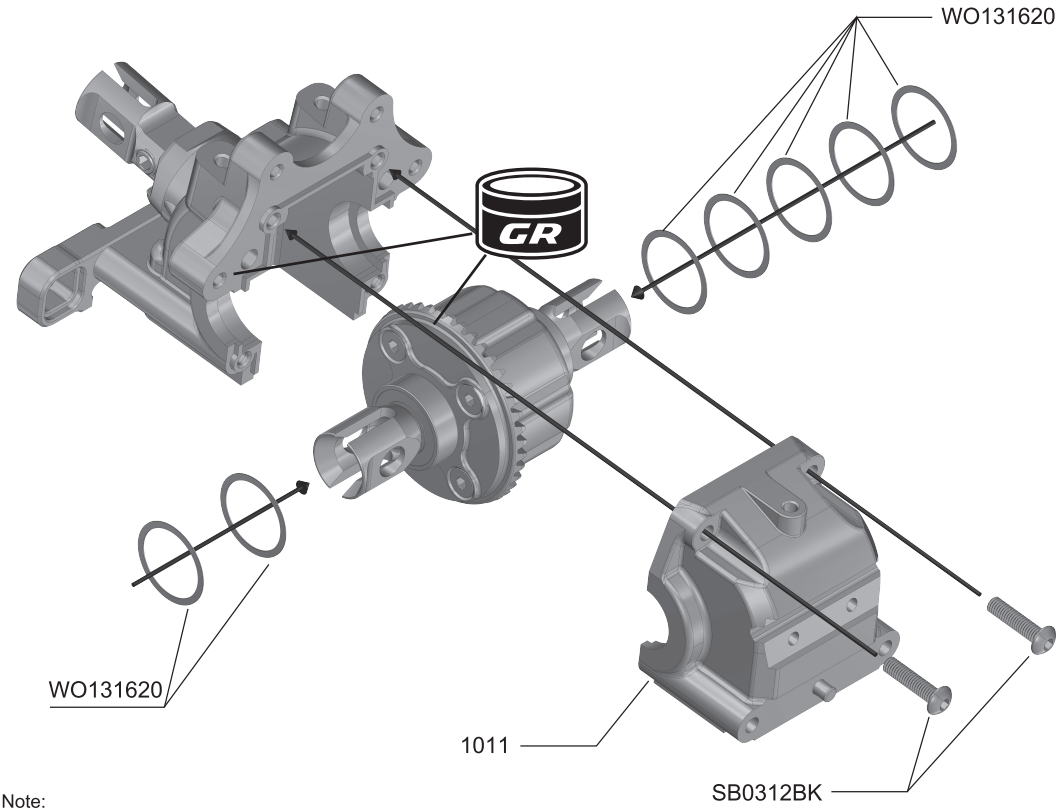

Note:
Please use WO131620 13x16x0.2mm shims to adjust the space between the crown gear and pinion gear.
Standard suggestion is 2 pcs shim on the diff crown gear side and 5 pcs on the other side.



SS0504BK
Set Screw M5x4mm x1



SF0314BK
Flat Screw M3x14mm x 2



BO051304
Ball Bearing 5x13x4 x2



WO131620
Differential Shim
13x16x.2mm x 7



4016
Pinion Gear Stopper
5x7x5.1mm x 1



SB0312BK
Ball Screw M3x12mm x 2

BAG D

SS0504BK
Set Screw M5x4mm x 1

SF0314BK
Flat Screw M3x14mm x 2

BO051304
Ball Bearing 5x13x4mm x2

WO131620
Differential Shim
13x16x0.2mm x 7

4016
Pinion Gear Stopper
5x7x5.1mm x 1

SB0312BK
Ball Screw M3x12mm x 2

6 REAR

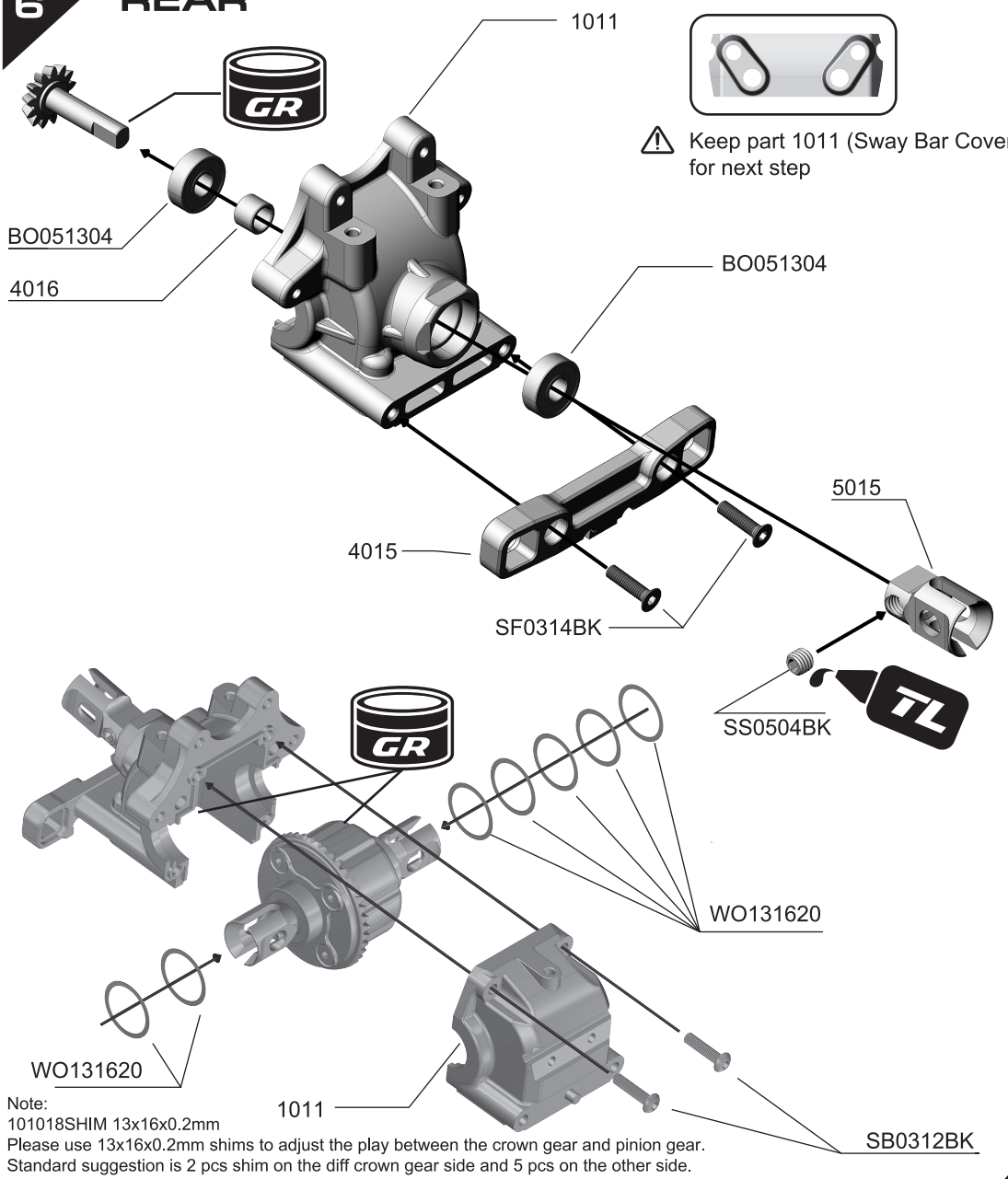

⚠ Keep part 1011 (Sway Bar Cover) for next step

Note:
101018SHIM 13x16x0.2mm
Please use 13x16x0.2mm shims to adjust the play between the crown gear and pinion gear.
Standard suggestion is 2 pcs shim on the diff crown gear side and 5 pcs on the other side.

BAG E

SB0316BK
Ball Screw M3x16mm x 2

5043
Down Stop Screw M4x10mm x2

7 L R x2

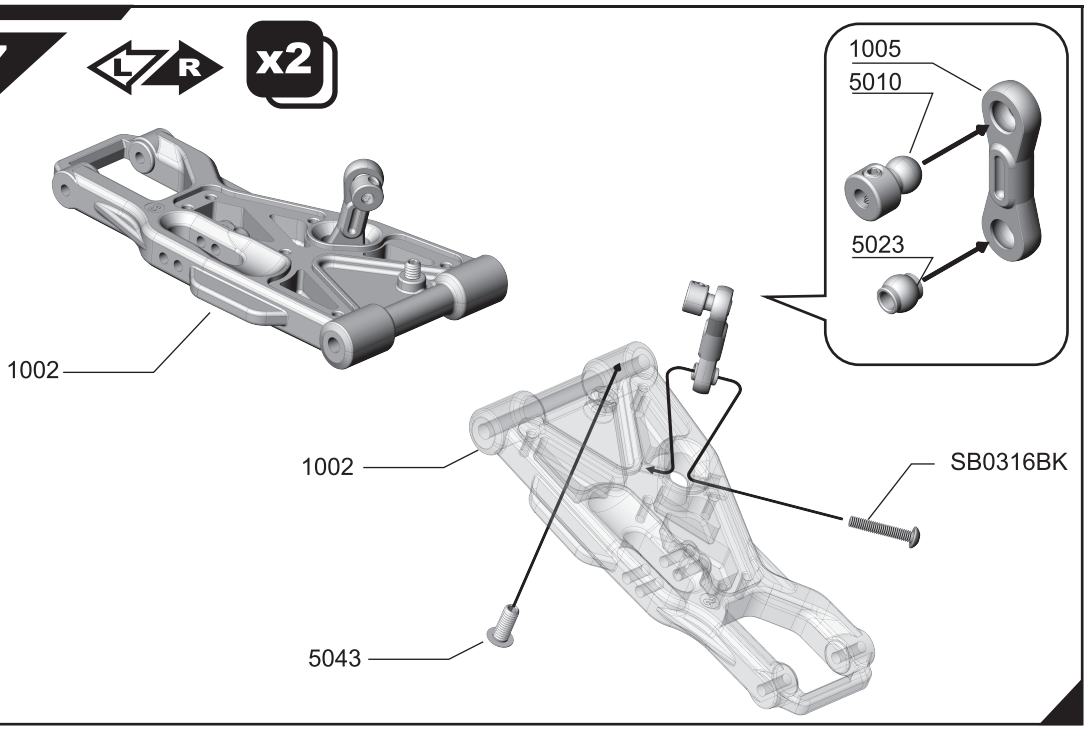

BAG E



SF0335BK
Flat Screw
M3x35mm x 2



5007
Lower Arm Hinge Pin (70mm) x 2

8

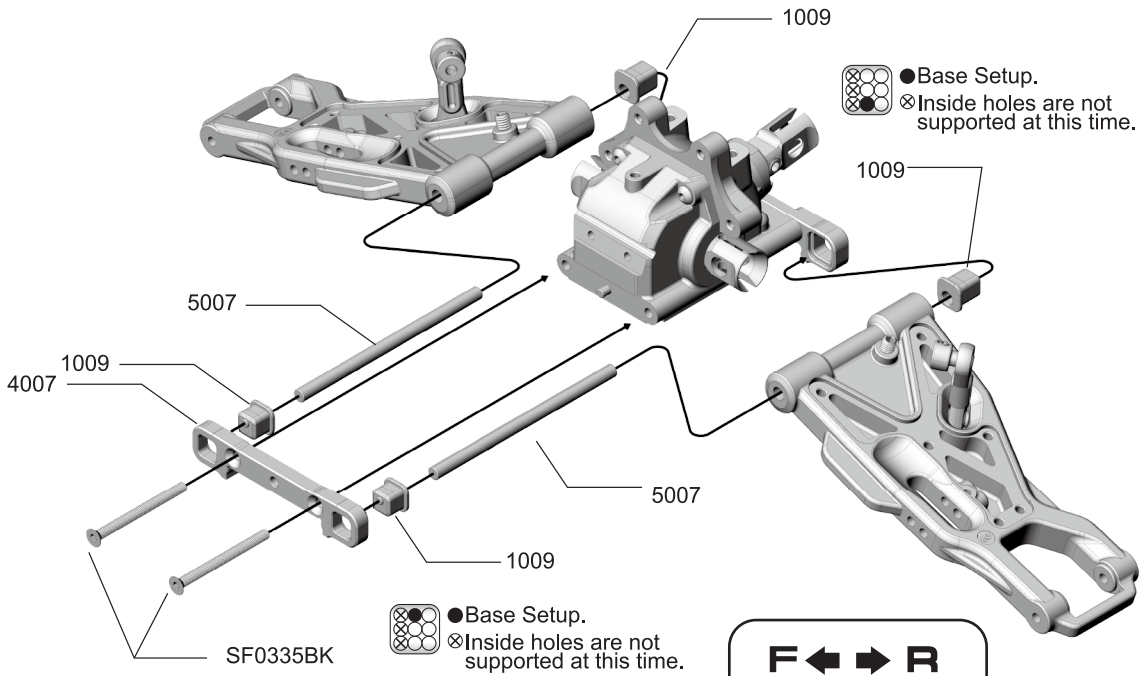



SS0303BK
Set Screw M3x3mm x 4

9

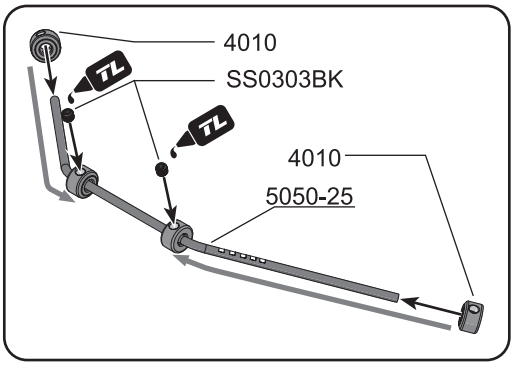

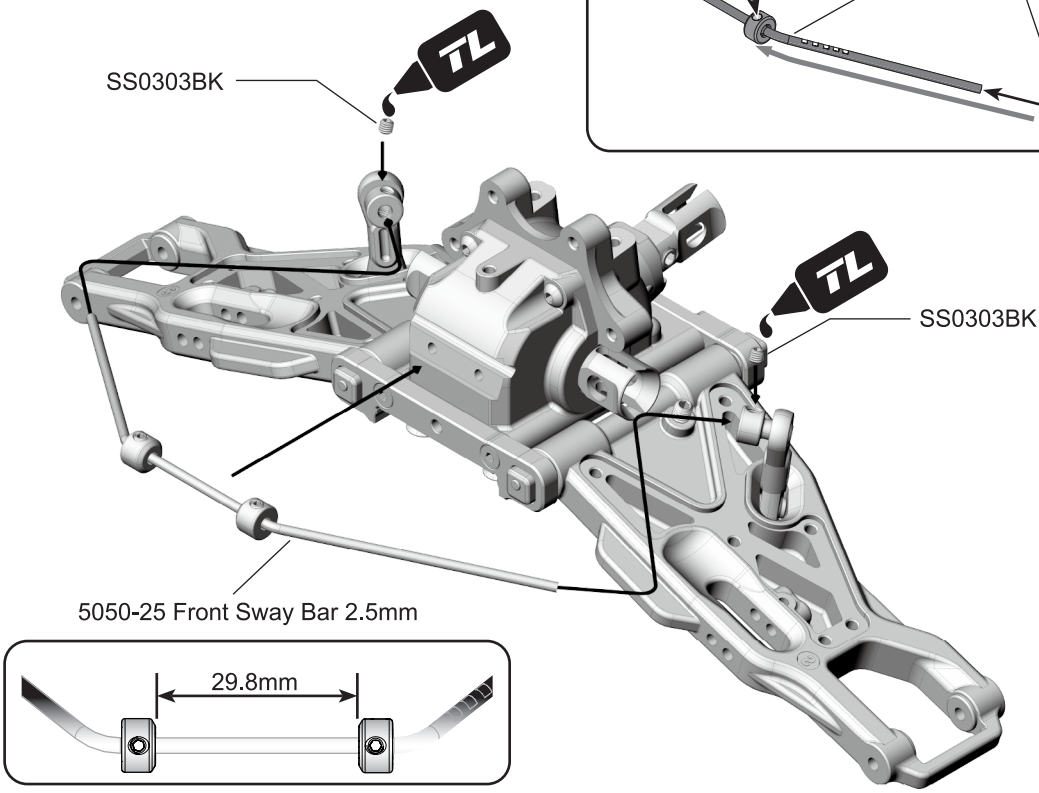

BAG E

SS0304BK
Set Screw M3x4mm x 2

SB0306BK
Ball Screw M3x6mm x 2

10

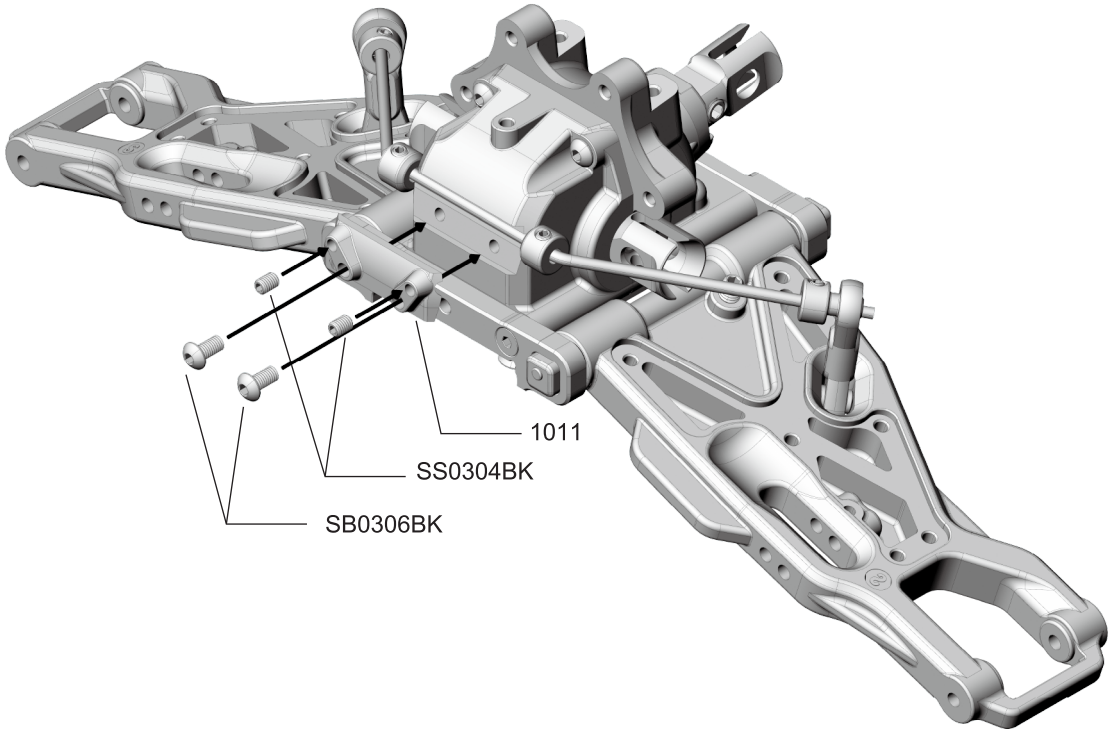

BAG F

SB0310BK
Ball Screw M3x10mm x1

SF0310BK
Flat Screw M3x10mm x2

SF0308BK
Flat Screw M3x8mm x2

11

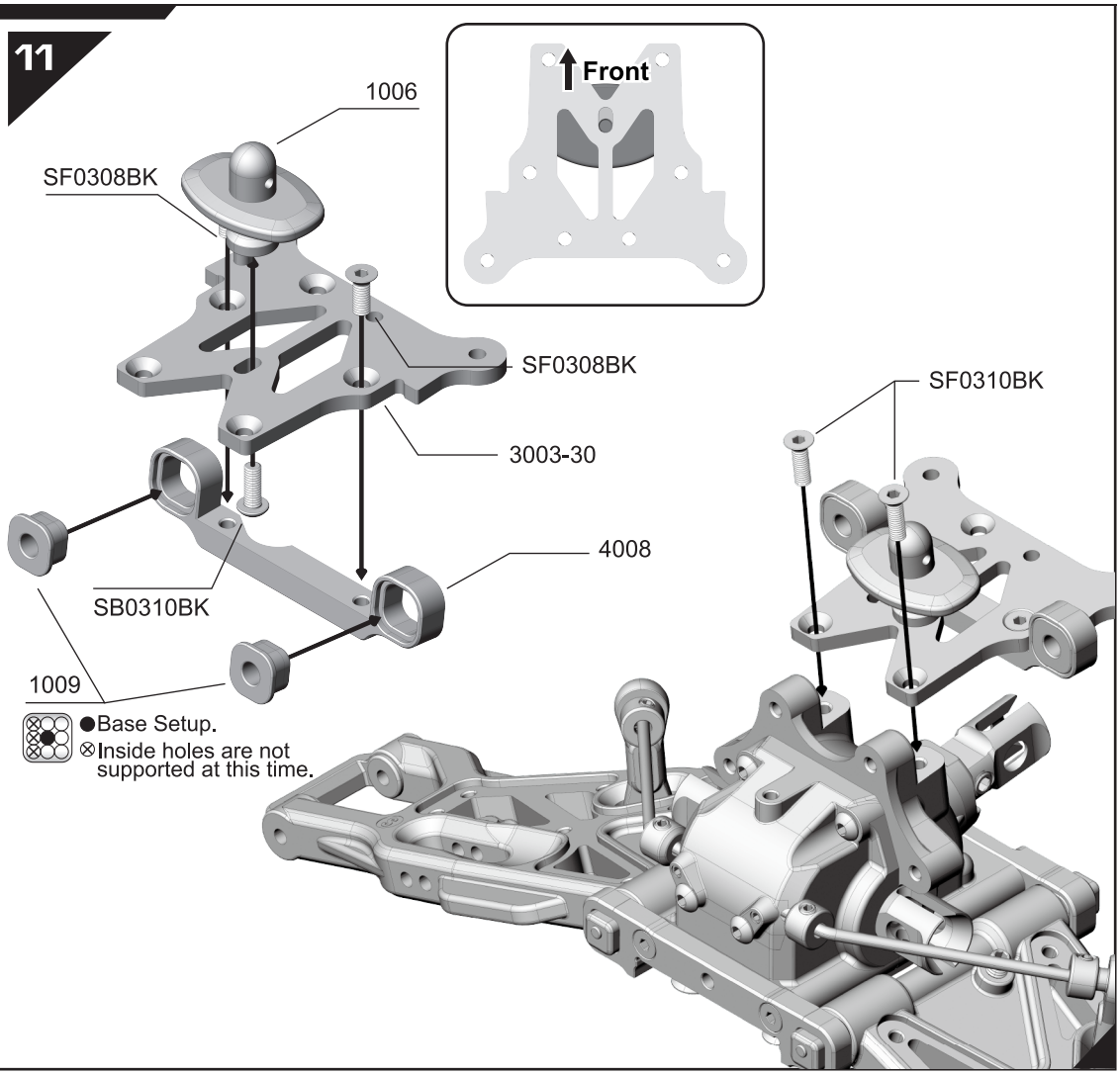

BAG F

12

L R x2

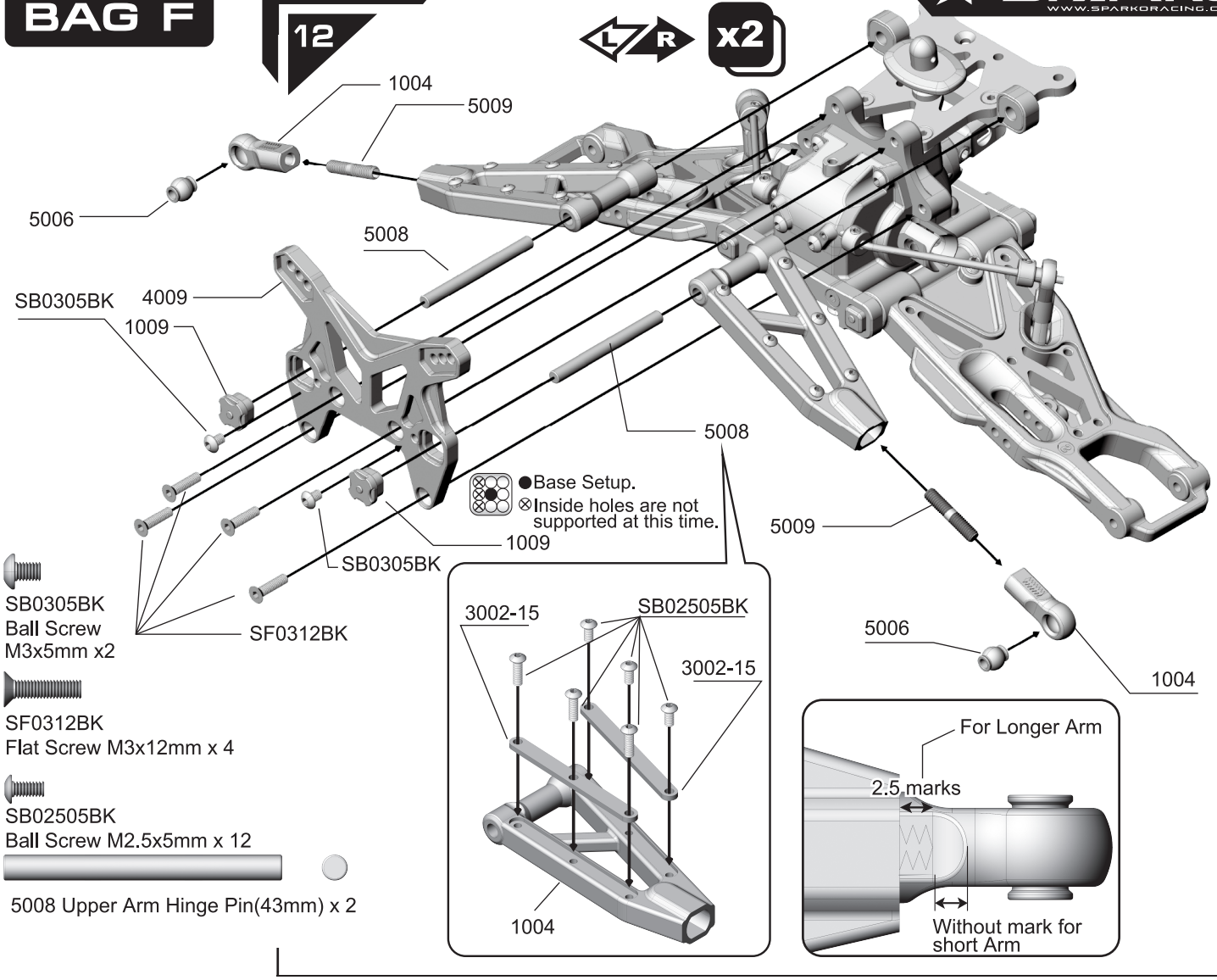

SB0305BK
Ball Screw M3x5mm x2

SF0312BK
Flat Screw M3x12mm x 4

SB02505BK
Ball Screw M2.5x5mm x 12

5008 Upper Arm Hinge Pin(43mm) x 2

BAG G

13

L R x2

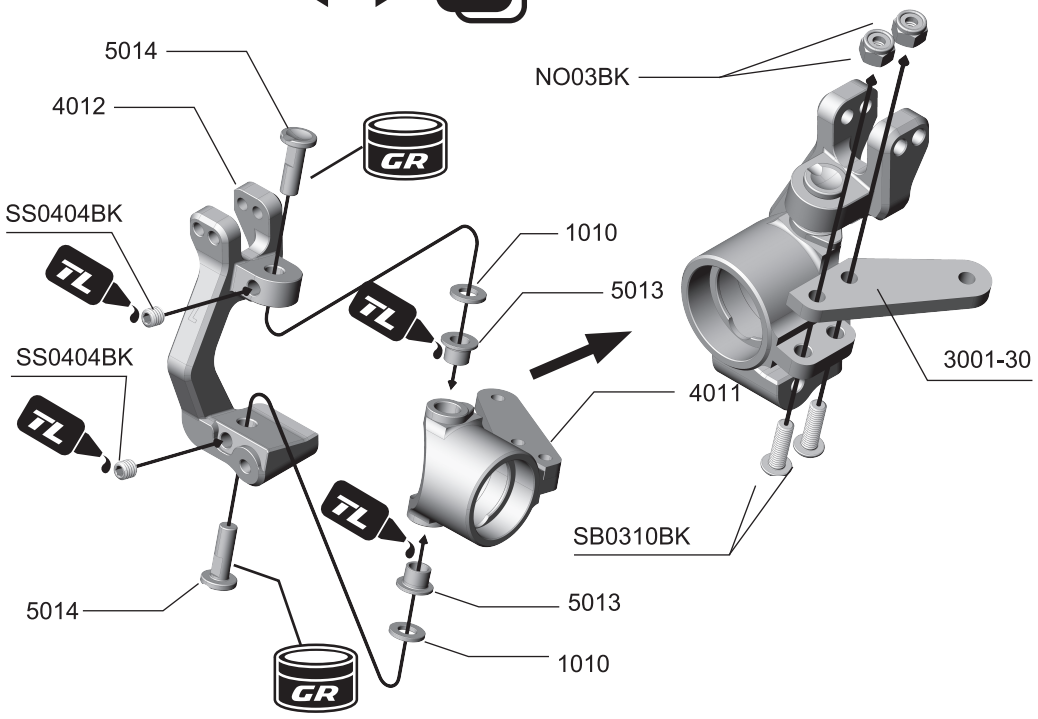

5014
Spindle Carrier Hinge Pins x 4

SS0404BK
Set Screw M4x4mm Set x 4

SB0310BK
Ball Screw M3x10mm x 4

NO03BK
Nut Lock M3 x 4

BAG G



BO081605
Ball Bearing 8x16x5mm x 4



SS0504BK
Set Screw M5x4mm x 2



5005
Pin M3.0x16.8mm x2



WO081020
Hex Shim 8x10x0.2mm x 2



5012
Hard Front Lower Suspension Shaft Screw x 2



SB0322BK
Ball Screw M3x22mm x 2



NO03BK
Nut Lock M3 x 4

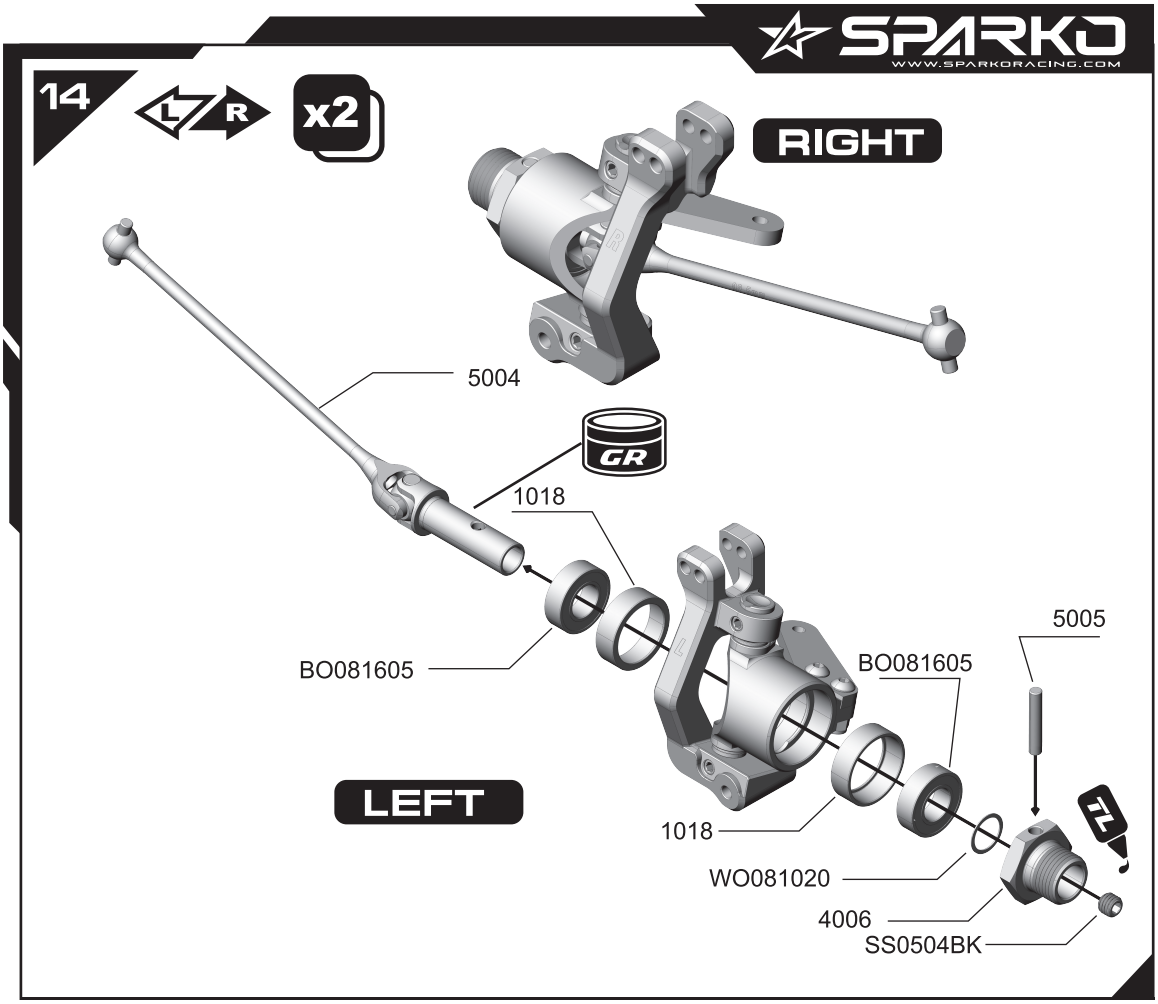

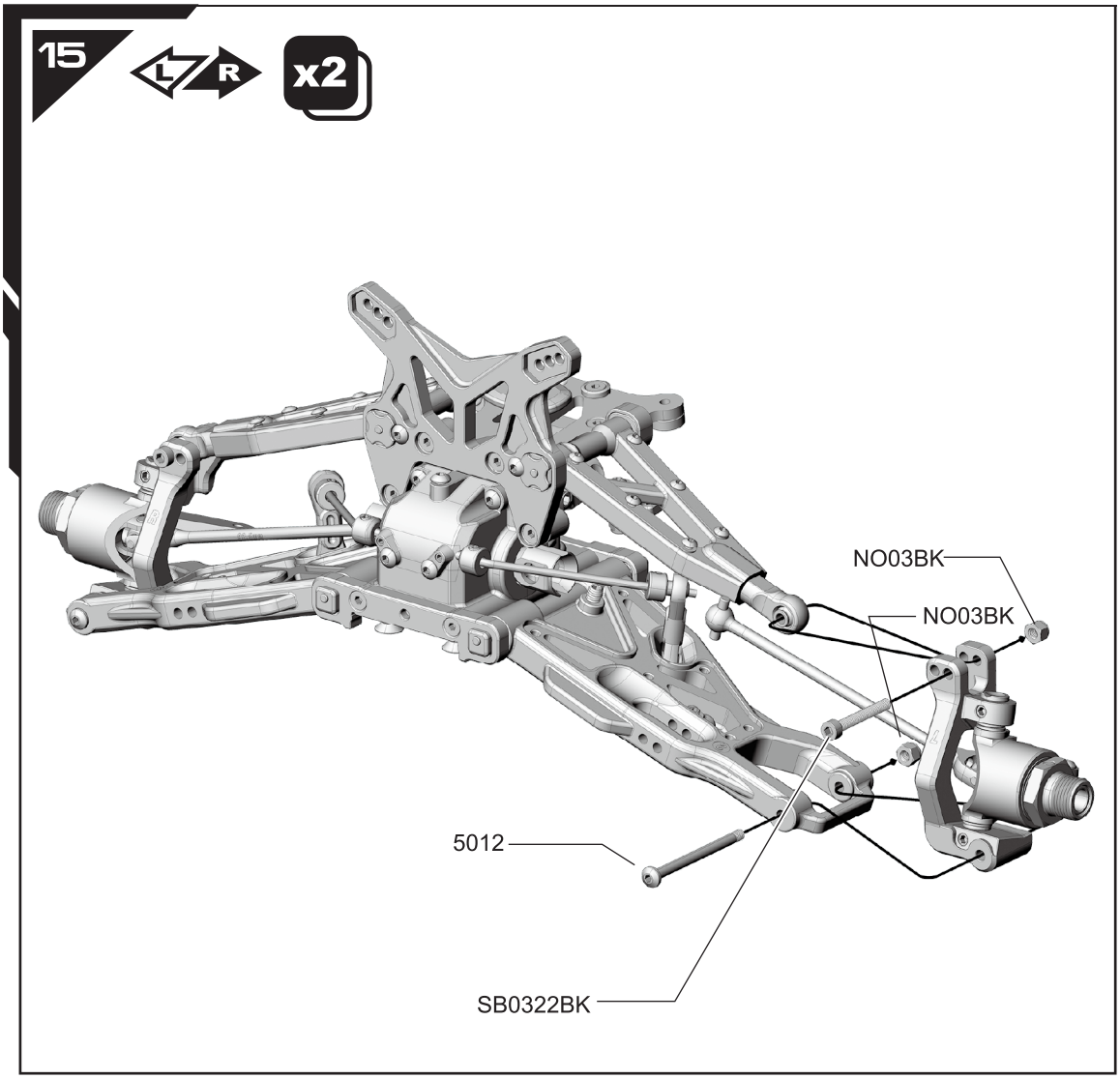

BAG H

NO03BK Nut Lock M3 x 2

WO030801
Shim 3x8x1mm x 4

WO030510
Shim 3x5x0.1mm x 4

BF030625
Flange Ball Bearing
3x6x2.5mm x 4

5042
Hex Shanked Button
M3x13.7mm x2

BO061003
Ball Bearing 6x10x3mm x 2

SC0206BK
Cap Screw M2x6mm x 1

SB0310BK
Ball Screw M3x10mm x 2

BO061003
Ball Bearing 6x10x3mm x 2

WO060830
Shim 6x8x0.3mm x 3

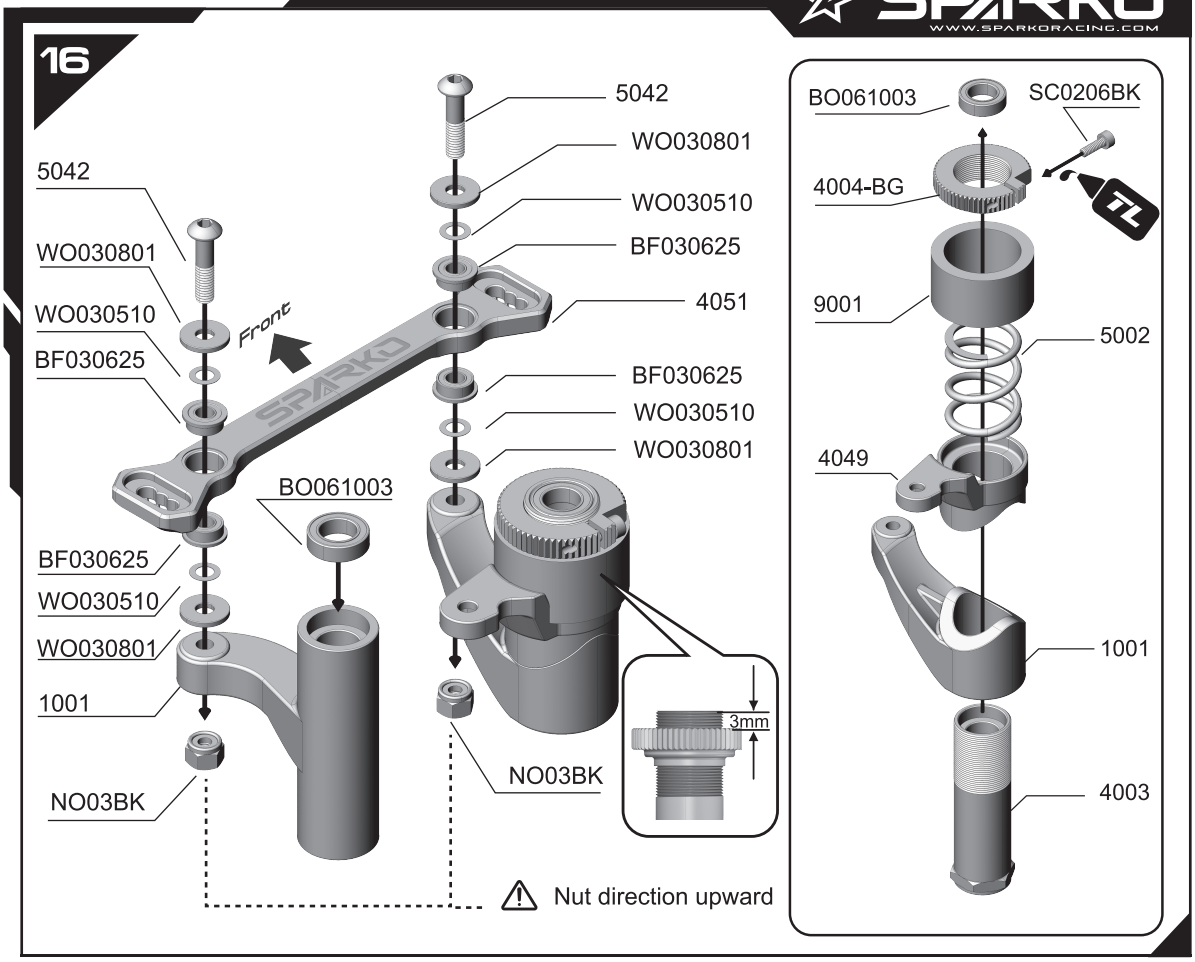

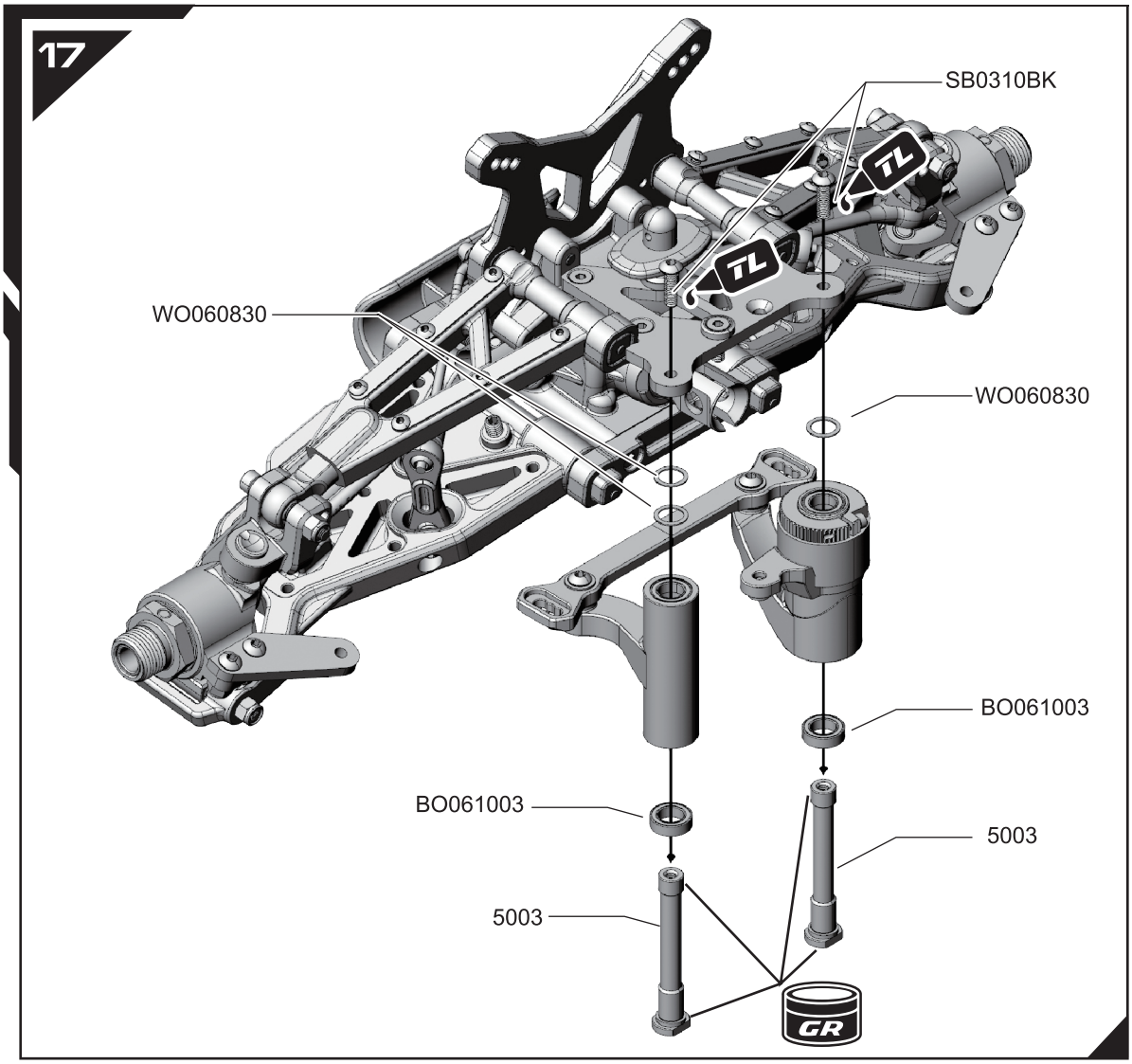

BAG I



SB0316BK
Ball Screw M3x16mm x 2



5043
Down Stop Screw
M4x10mm x 2

18



19



SB0310BK
Ball Screw M3x10mm x 1



SF0312BK
Flat Screw M3x12mm x 6

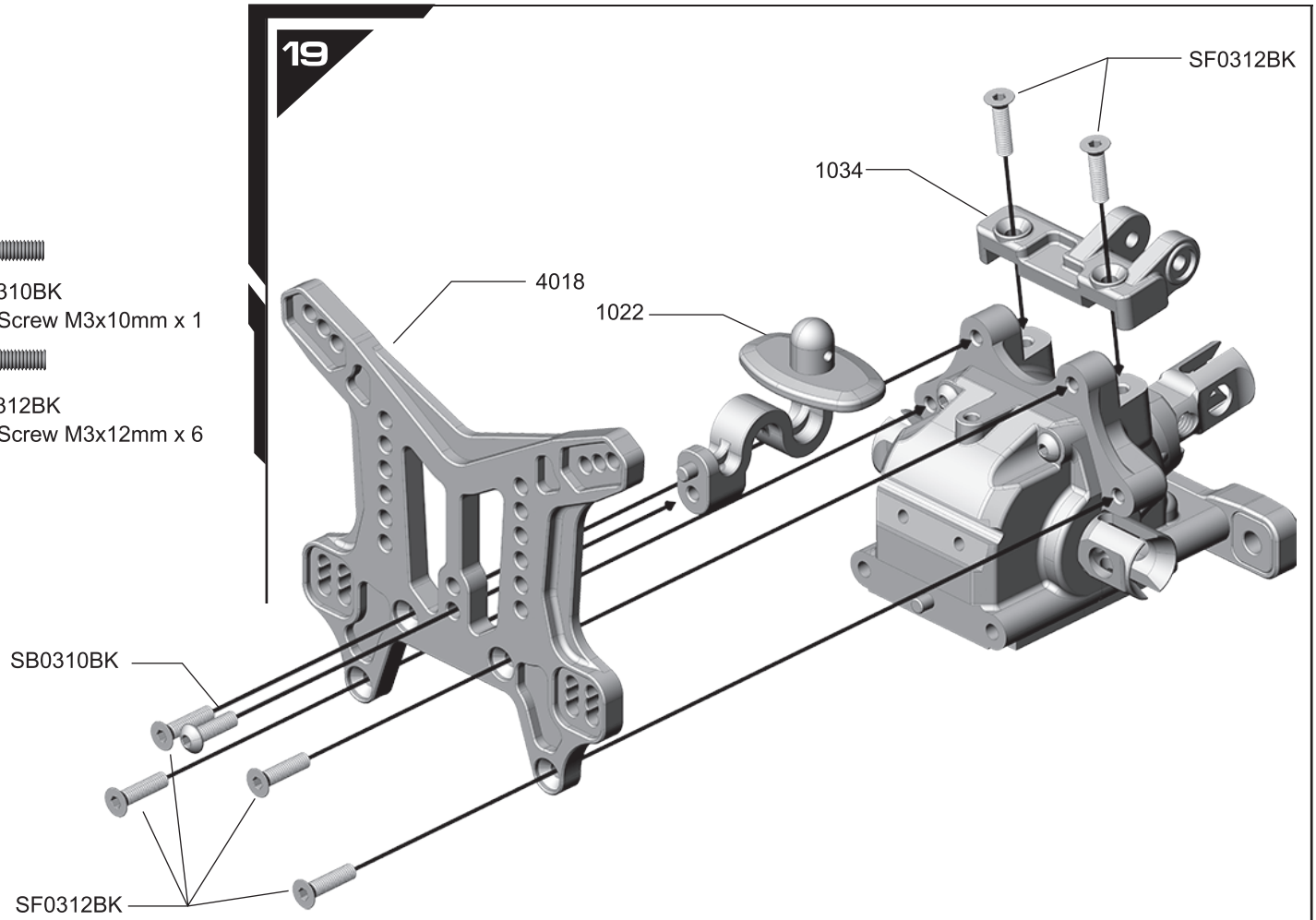

BAG I



SF0335BK
Flat Screw M3x35mm x 2



5007
Lower Arm Hinge Pin x 2



SS0303BK
Set Screw M3x3mm x 4

20

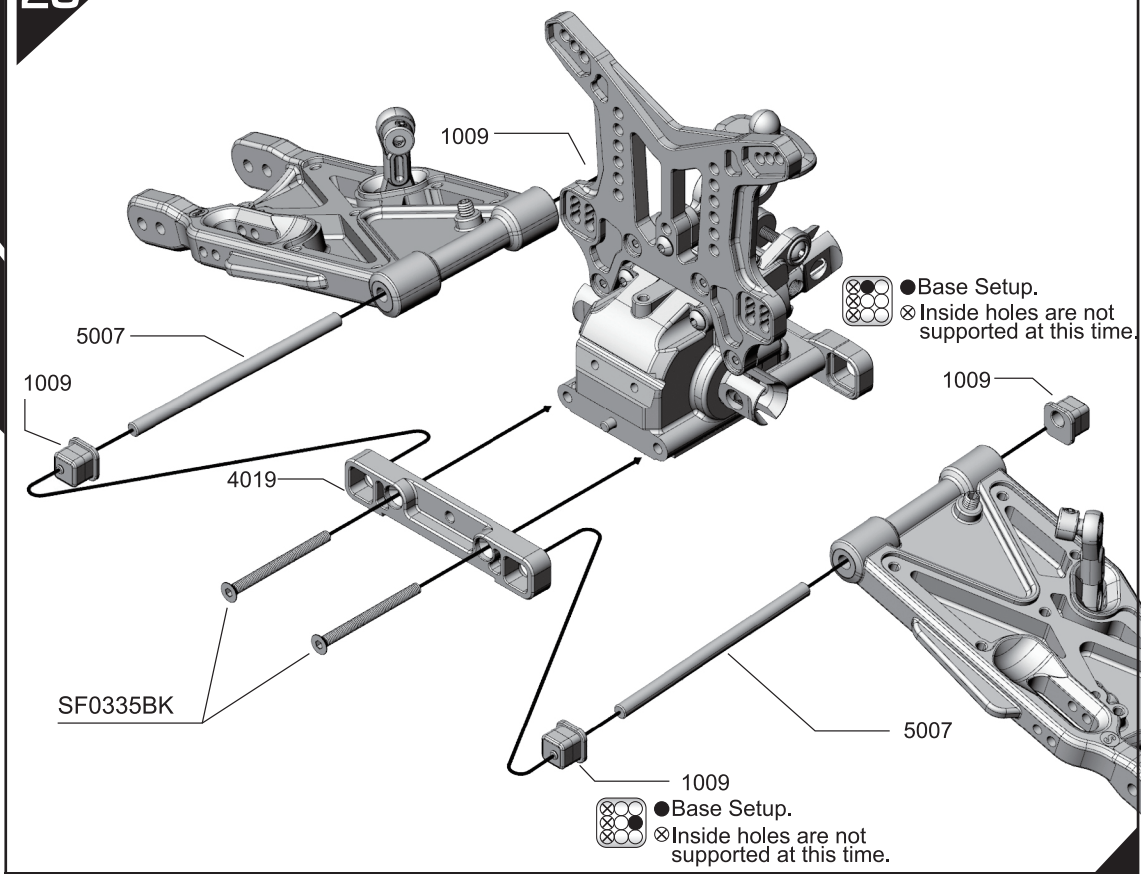

21

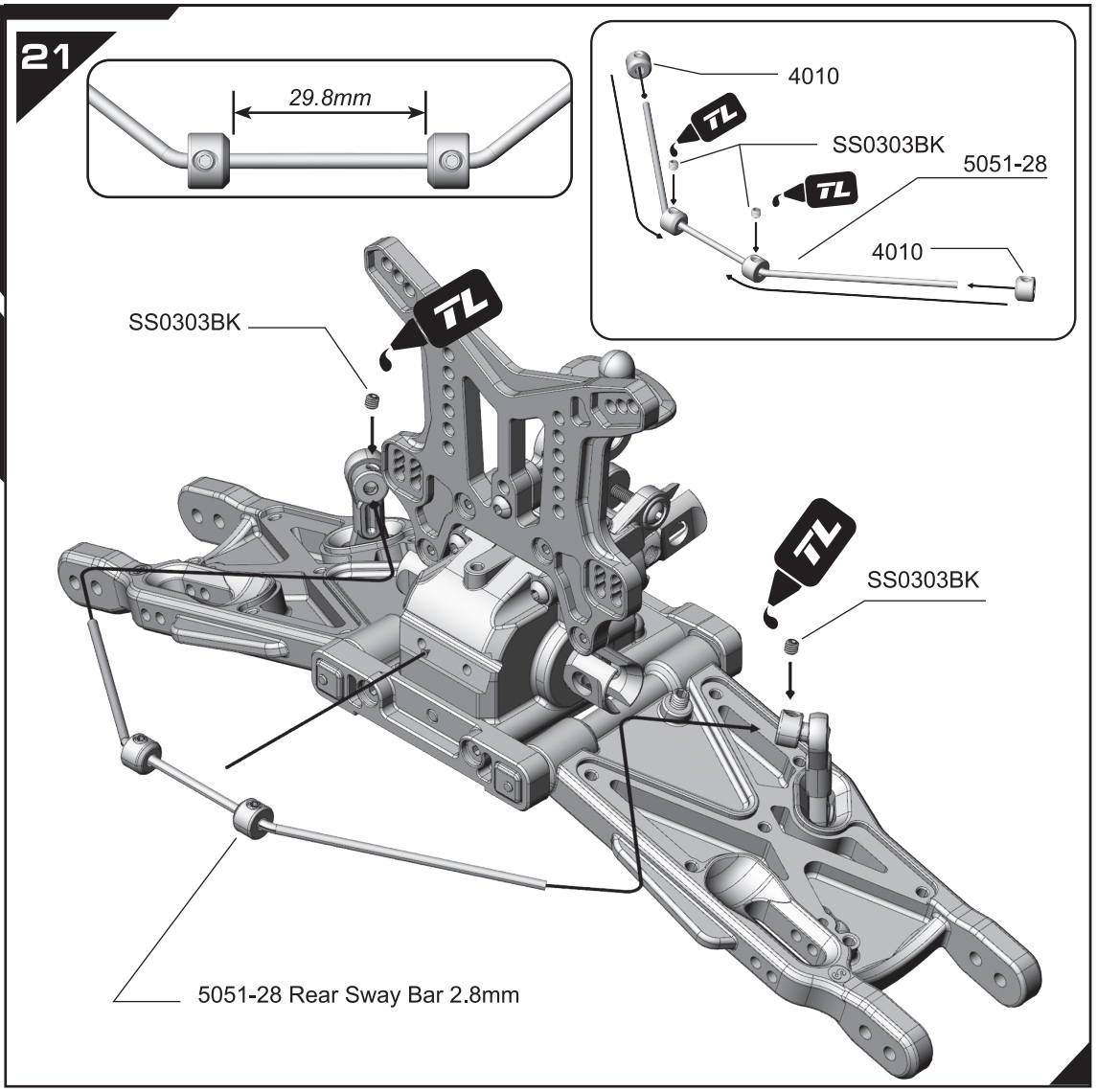

BAG I



SS0304BK
Set Screw M3x4mm x 2



SB0306BK
Ball Screw M3x6mm x 2

22

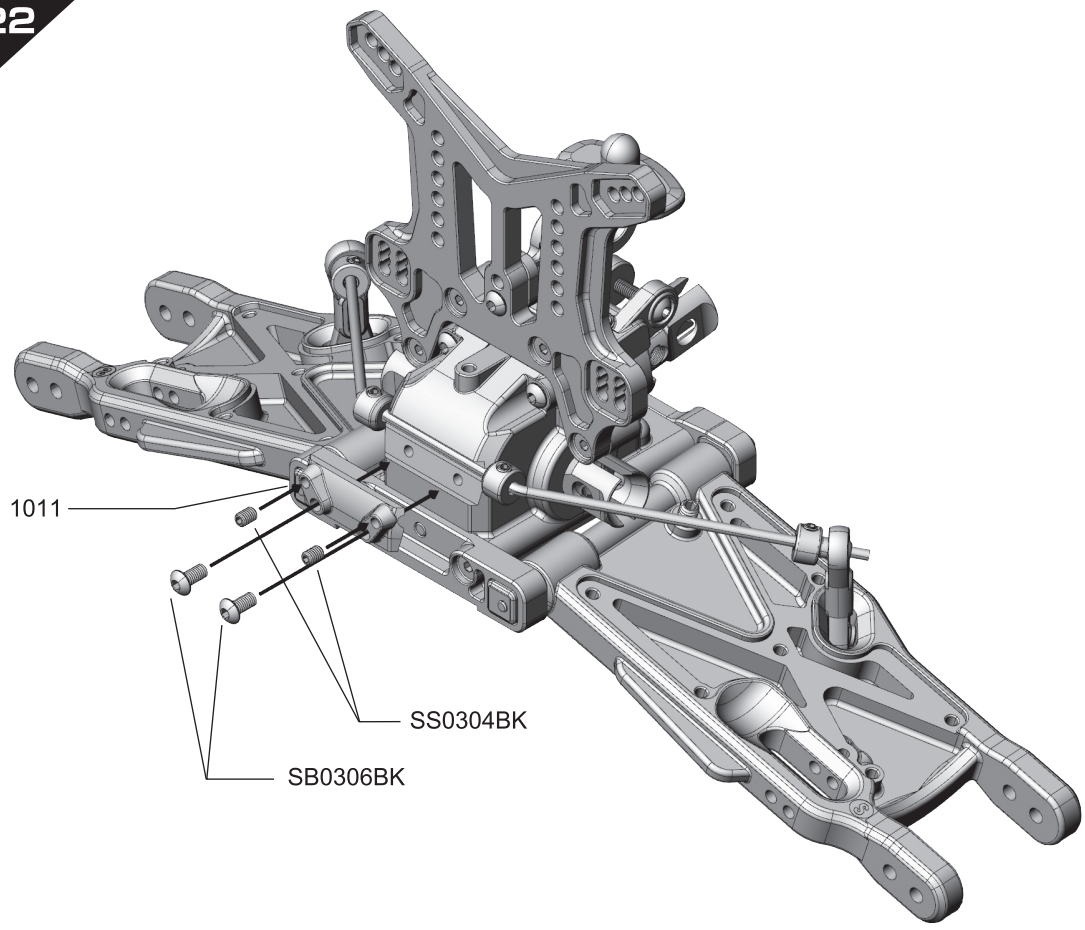

BAG J



SS0504BK
Set Screw M5x4mm x 2



5005
Pin M3.0x16.8mm x 2

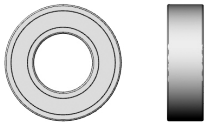

BO081605
Ball Bearing 8x16x5mm x 4



SB0322BK
Ball Screw M3x22mm x 4



NO03BK
Nut Lock M3 x 4



WO081020
Hex Shim 8x10x0.2mm x 2

23 L/R x2

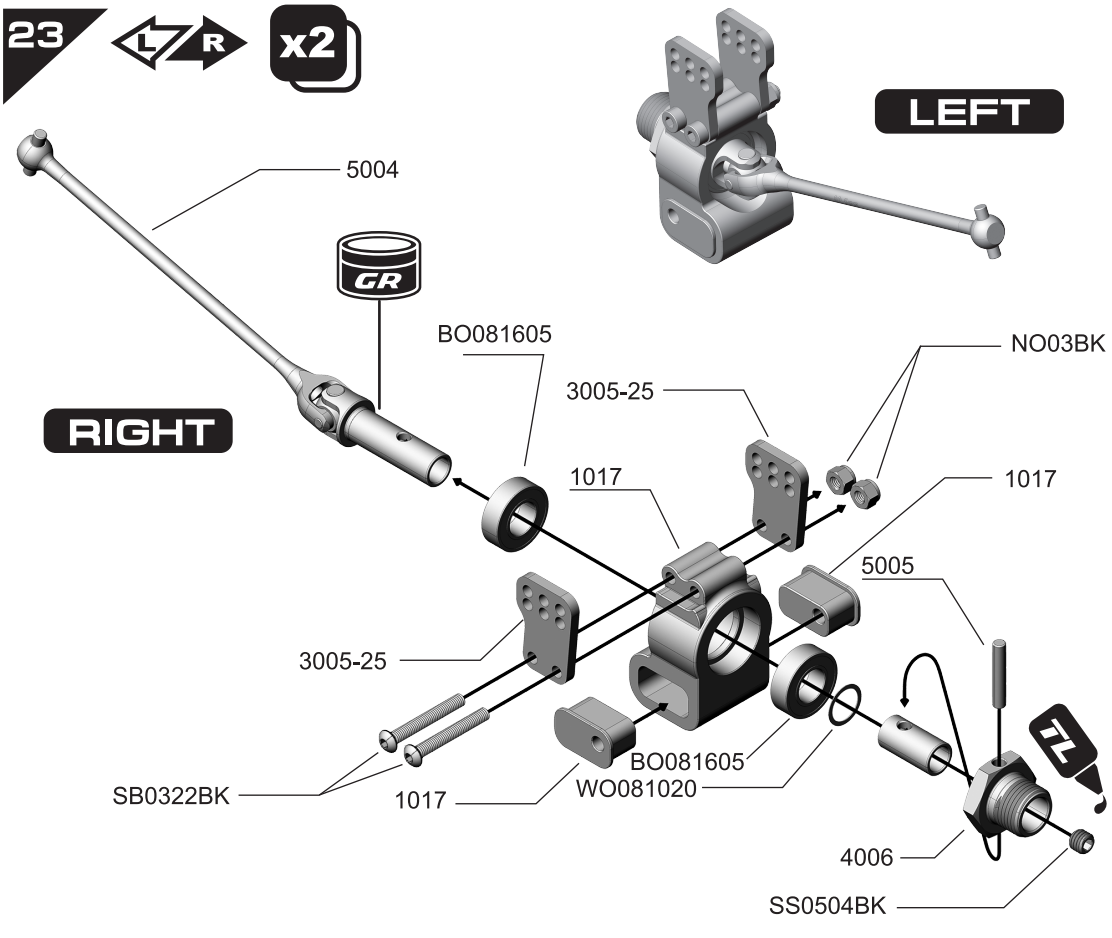

BAG J

24

L/R x2

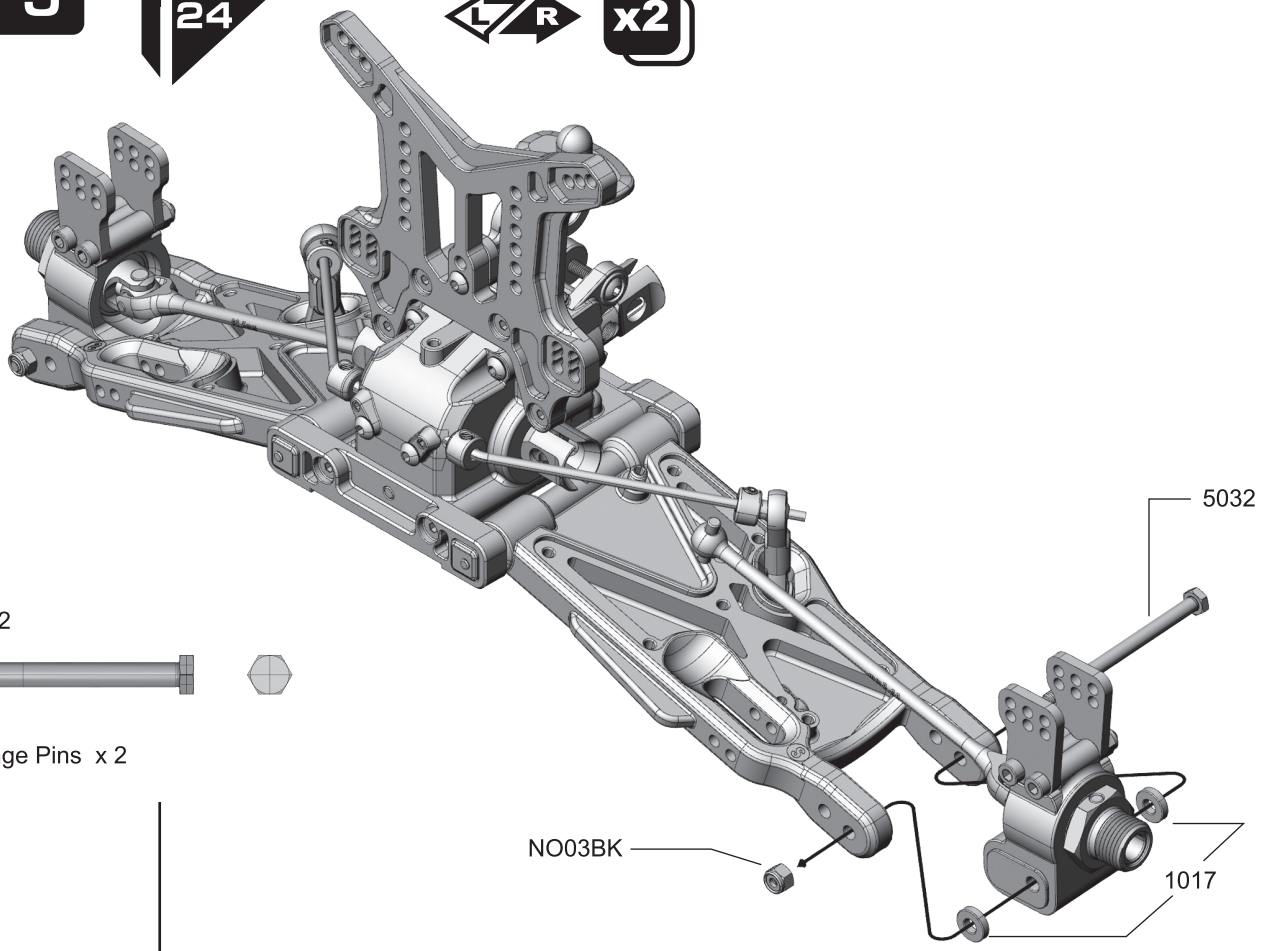



NO03BK
Nut Lock M3 x 2

5032
Rear Outer Hinge Pins x 2

25

L/R x2

RIGHT

1:1

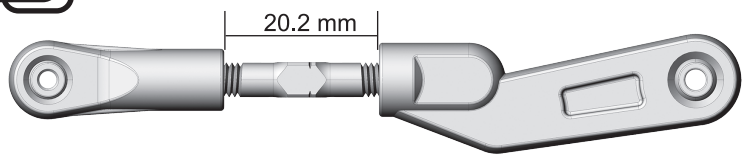



1:1

5033
Camber Turnbuckle
5x45mm x 2

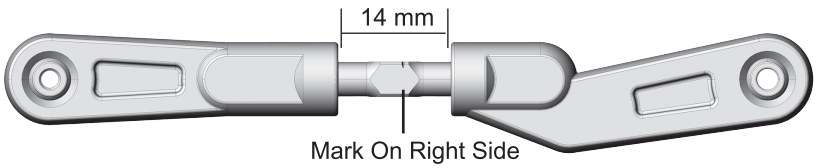

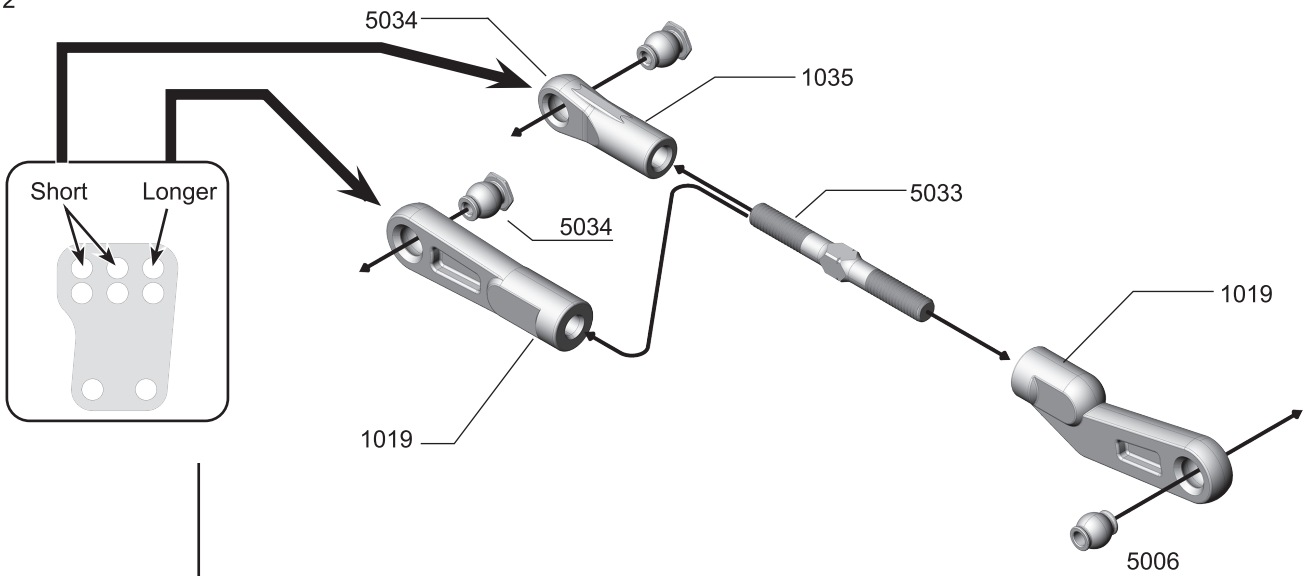

BAG J



SC0310BK
Cap Screw M3x10mm x 2



SB0322BK
Ball Screw M3x22mm x 2



NO03BK
Nut Lock M3 x 2

26

L R x2

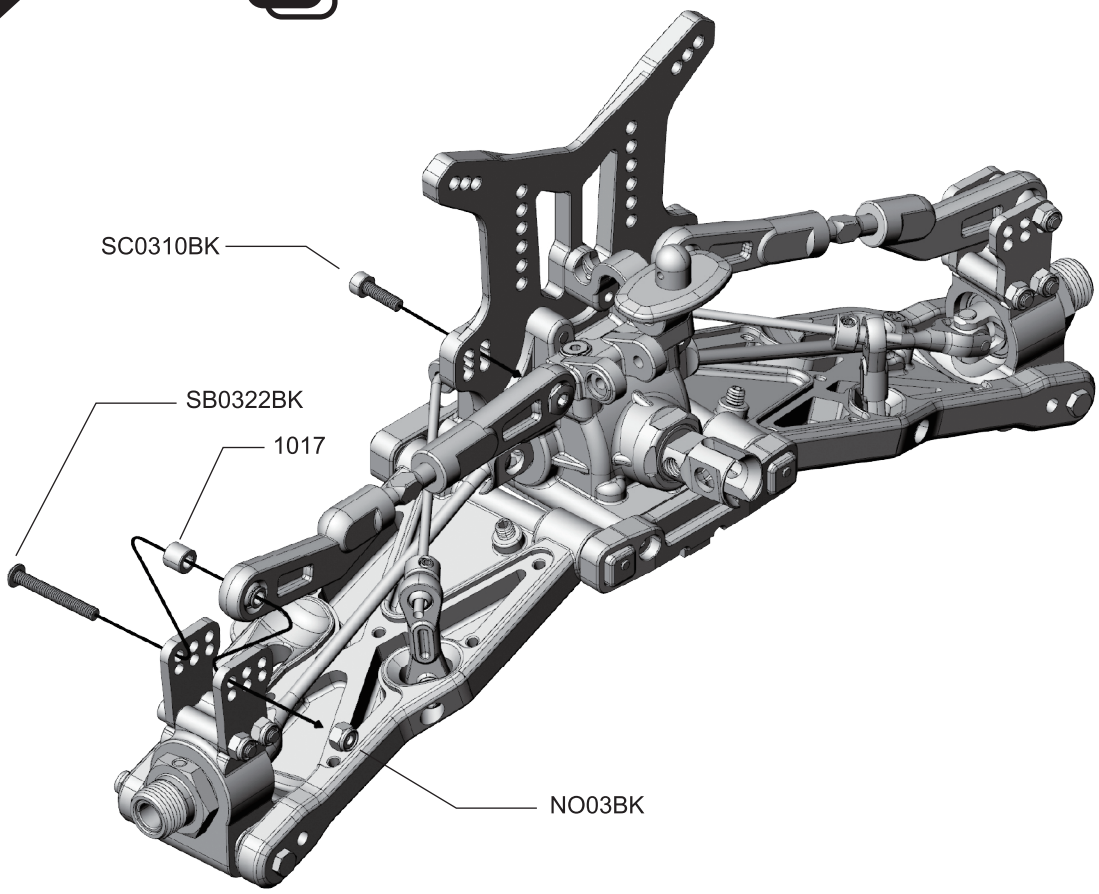



NO03BK
Nut Lock M3 x4



SC0316BK
Cap Screw M3x16mm x4

27

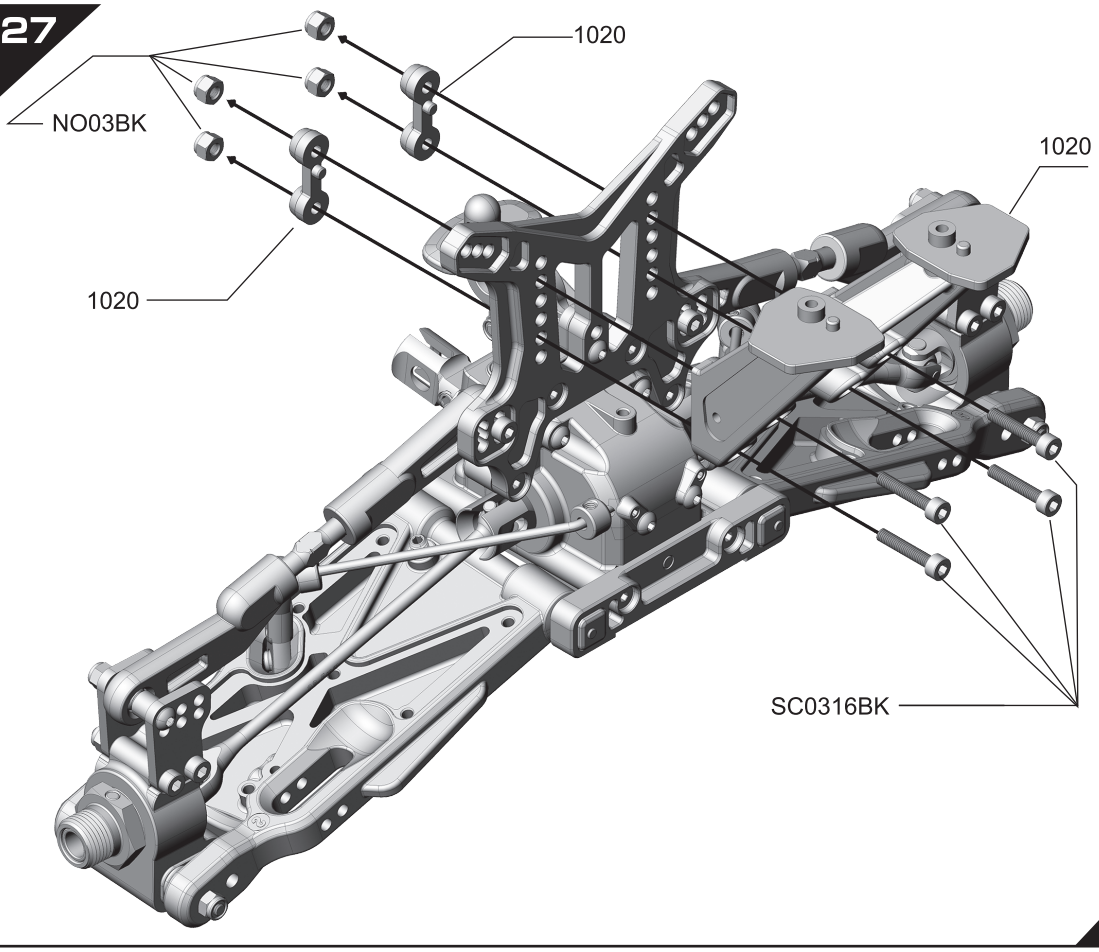

BAG K

SF0306BK
Flat Screw M3x6mm x8

SF0408BK
Flat Screw M4x8mm x2

28

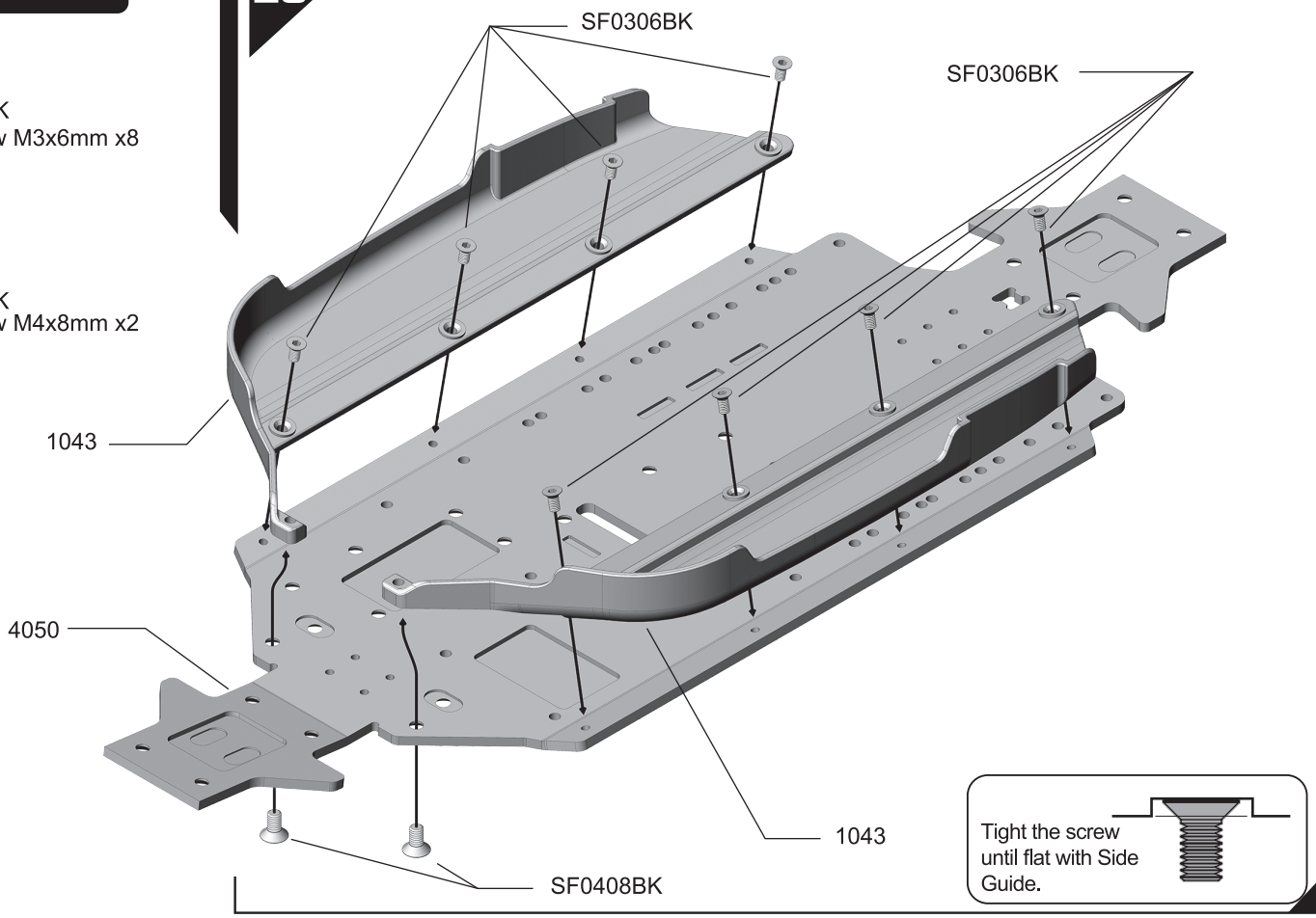

SF0410BK
Flat Screw M4x10mm x2

SF0416BK
Flat Screw M4x16mm x4

29

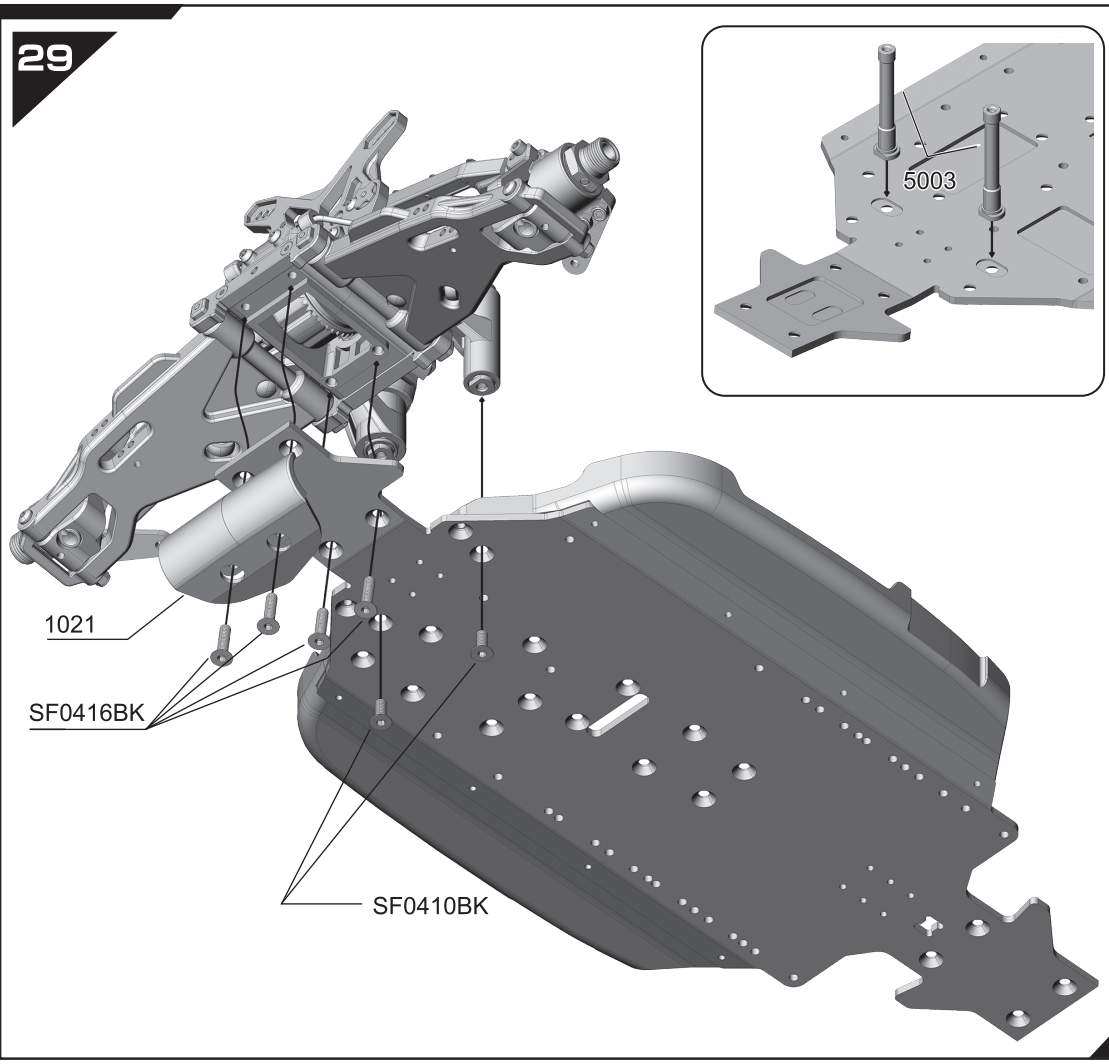

BAG L



SF0412BK
Flat Screw M4x12mm x1



SF0410BK
Flat Screw M4x10mm x5



SF0408BK
Flat Screw M4x8mm x2



SB0310BK
Ball Screw M3x10mm x1

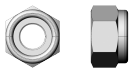

NO04BK
Nut Lock M4 x1

30

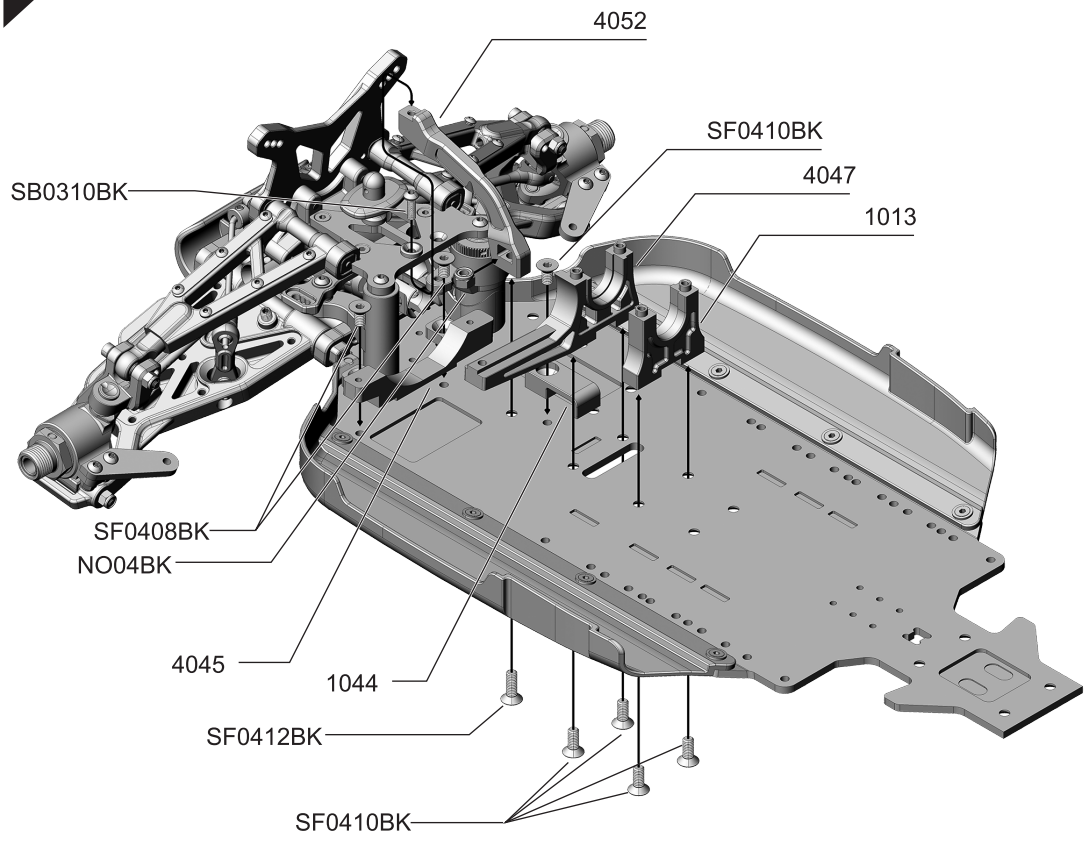



SS0404BK
Set Screw M4x4mm x1



SC0310BK
Cap Screw M3x10mm x2



SC0410BK
Cap Screw M3x10mm x2



SC0312BK
Cap Screw M3x12mm x1

31

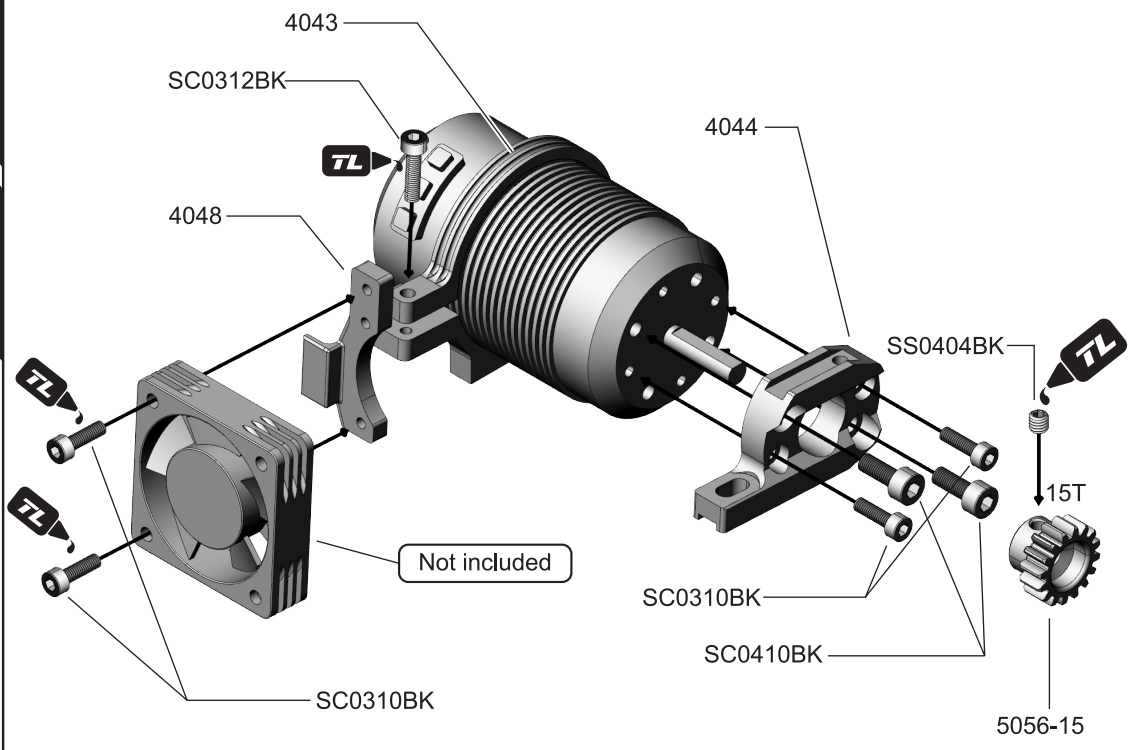

BAG L



SC0310BK
Cap Screw
M3x10mm x 2



SB0412BK
Ball Screw
M4x12mm x 1

32

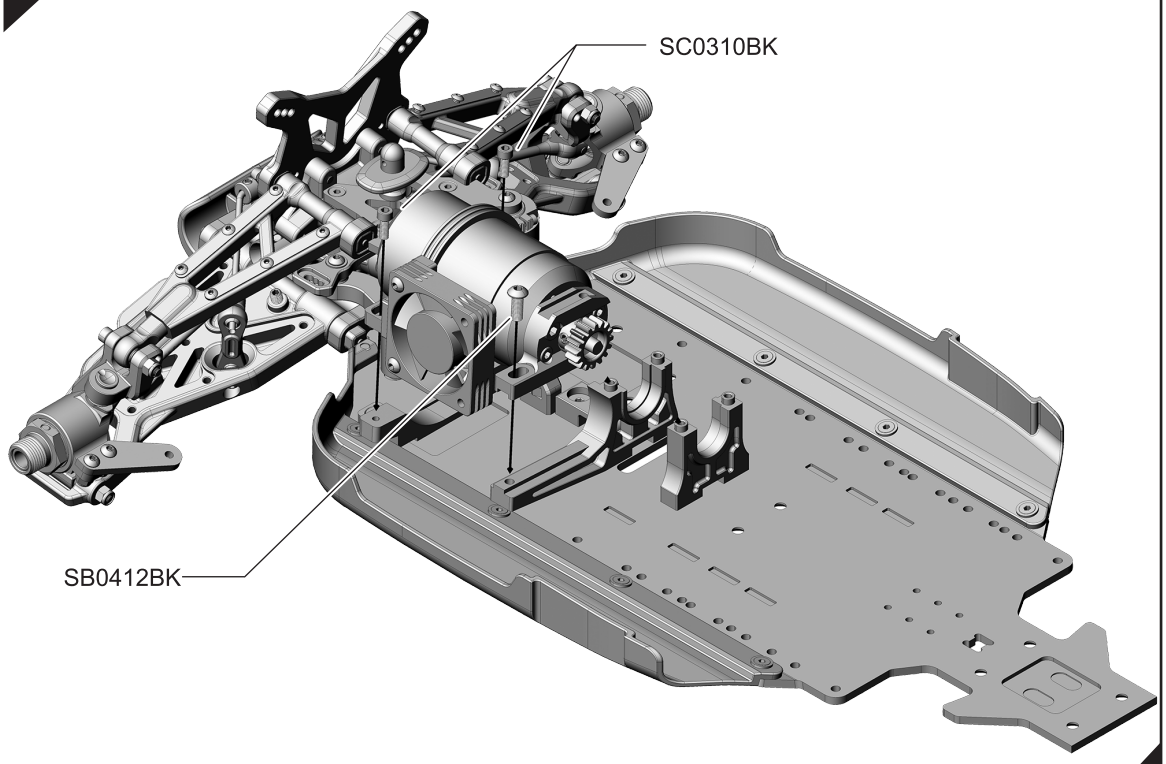

33



SF0308BK
Flat Screw
M3x8mm x 4



SB0310BK
Ball Screw
M3x10mm x 2



SB0325BK
Ball Screw
M3x25mm x 4



SB0412BK
Ball Screw
M4x12mm x 1

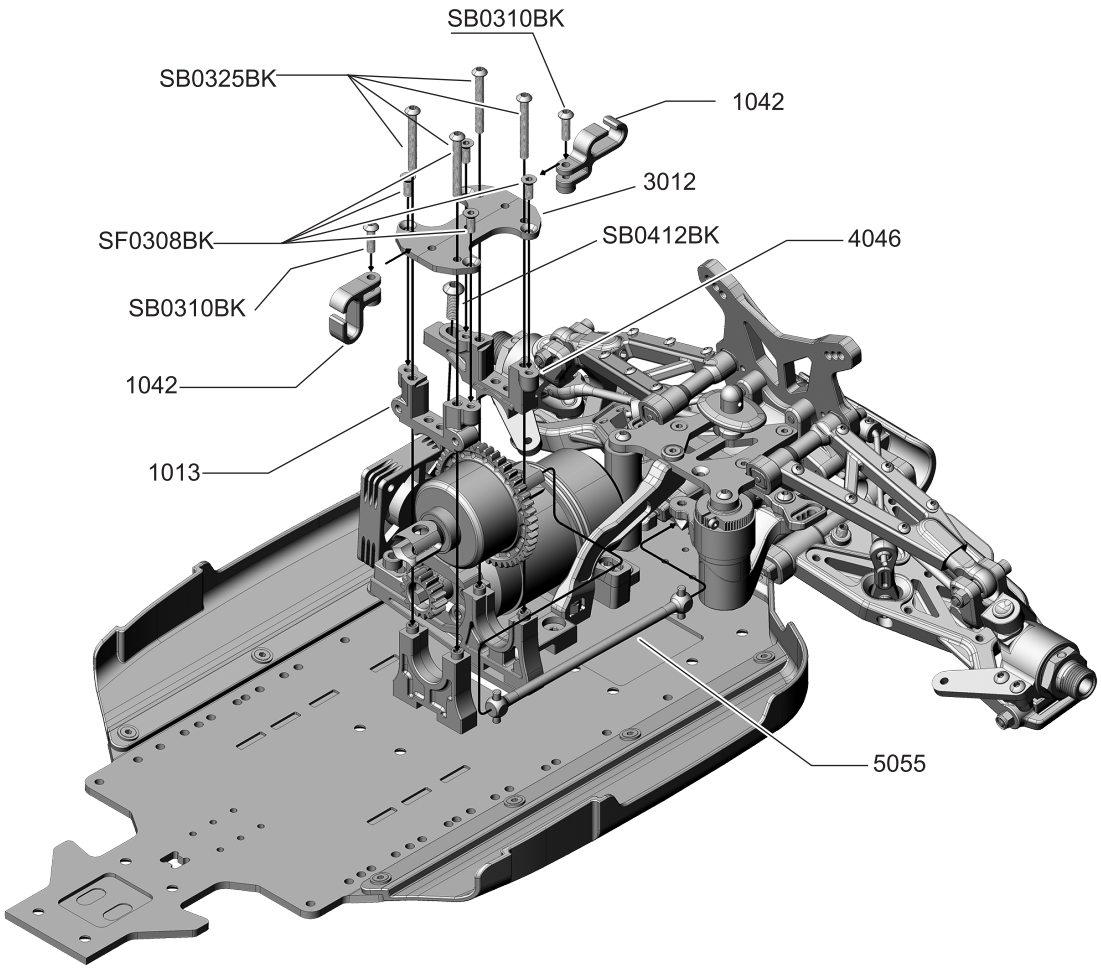

BAG M



SF0416BK
Flat Screw M4x16mm x4



SB0320BK
Ball Screw M3x20mm x1



SF0412BK
Flat Screw M3x12mm x1



NO03BK
Nut Lock M3 x1



NO04BK
Nut Lock M4 x1



SF0410BK
Flat Screw M4x10mm x 2

34

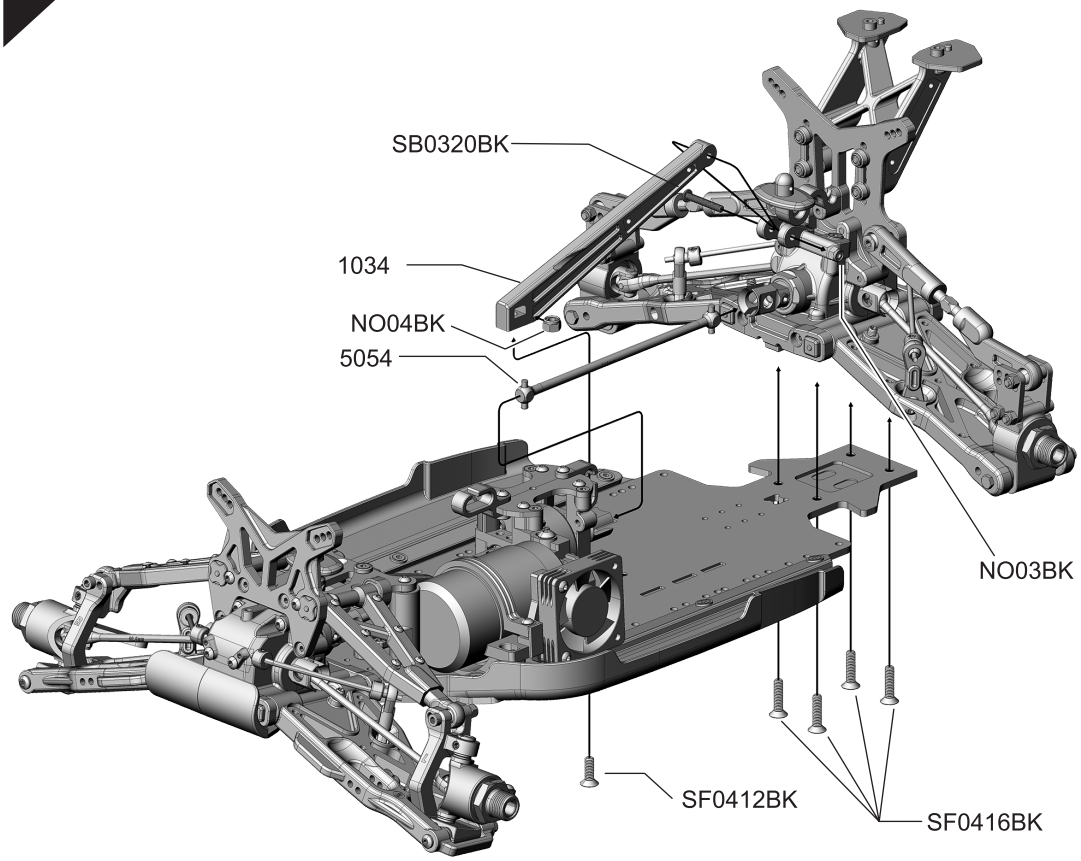

35

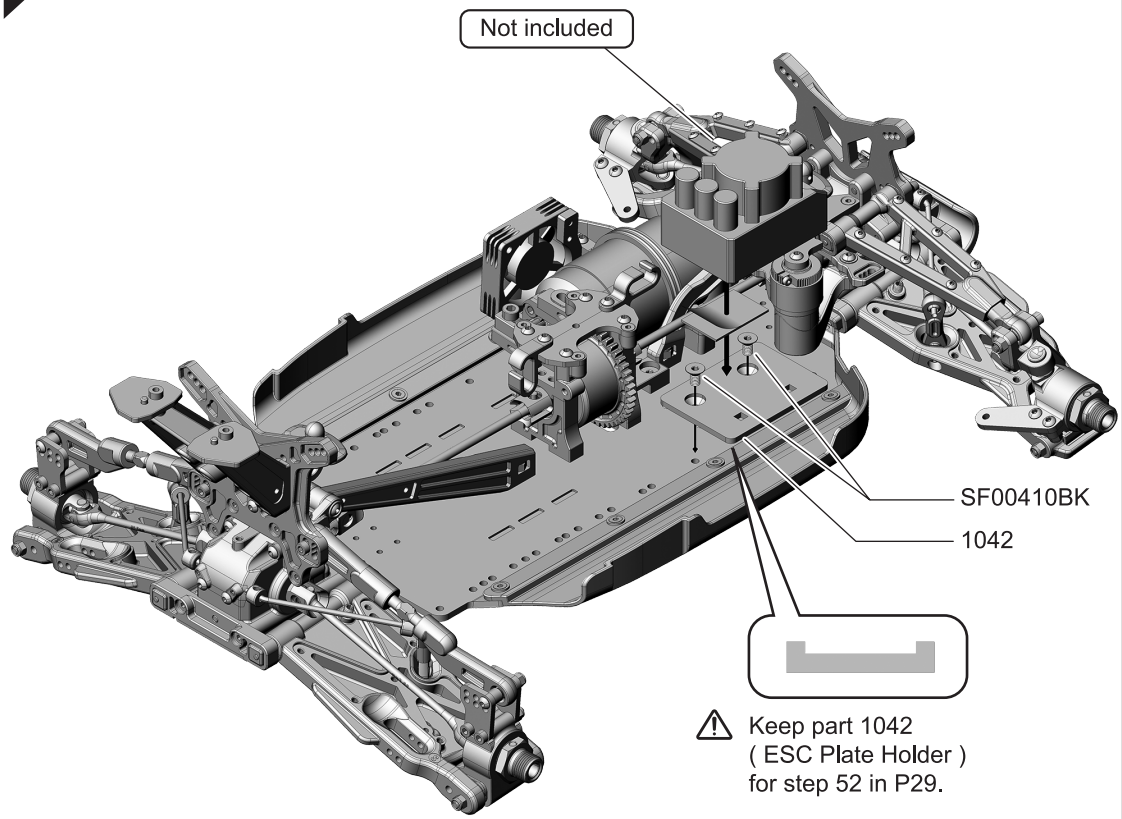

⚠ Keep part 1042
(ESC Plate Holder)
for step 52 in P29.

BAG M



SB0330BK
Ball Screw M3x30mm x 8



SF0410BK
Flat Screw M4x10mm x 12

36

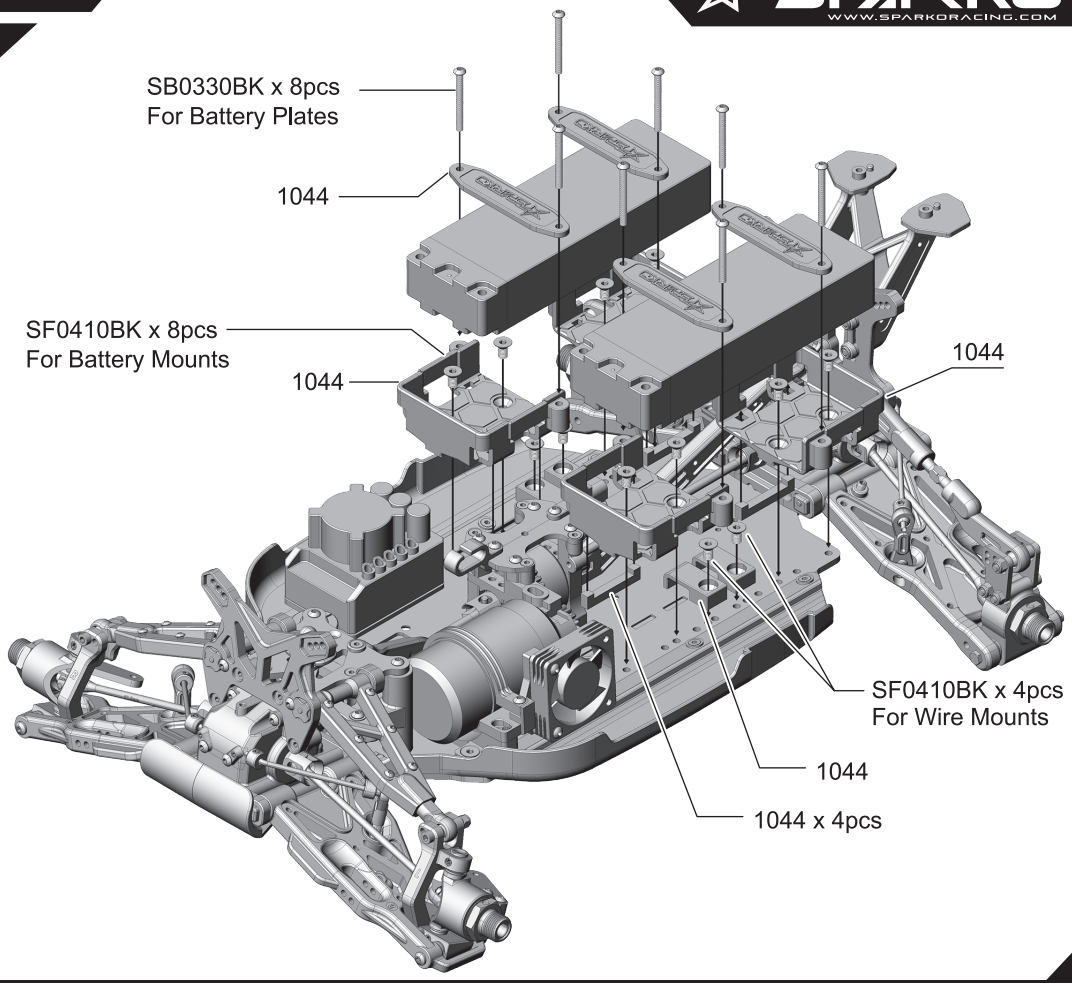

BAG N



5022
Servo Steering Turnbuckle
M3x30mm x 1



SB0314BK
Ball Screw M3x14mm x 4



SF0308BK
Flat Screw M3x8mm x 1



SB0318BK
Ball Screw M3x18mm x 1



4053
Aluminum Steering Servo
Horn Washer 4mm x 1



NO03BK
Nut Luck M3 x 1

37

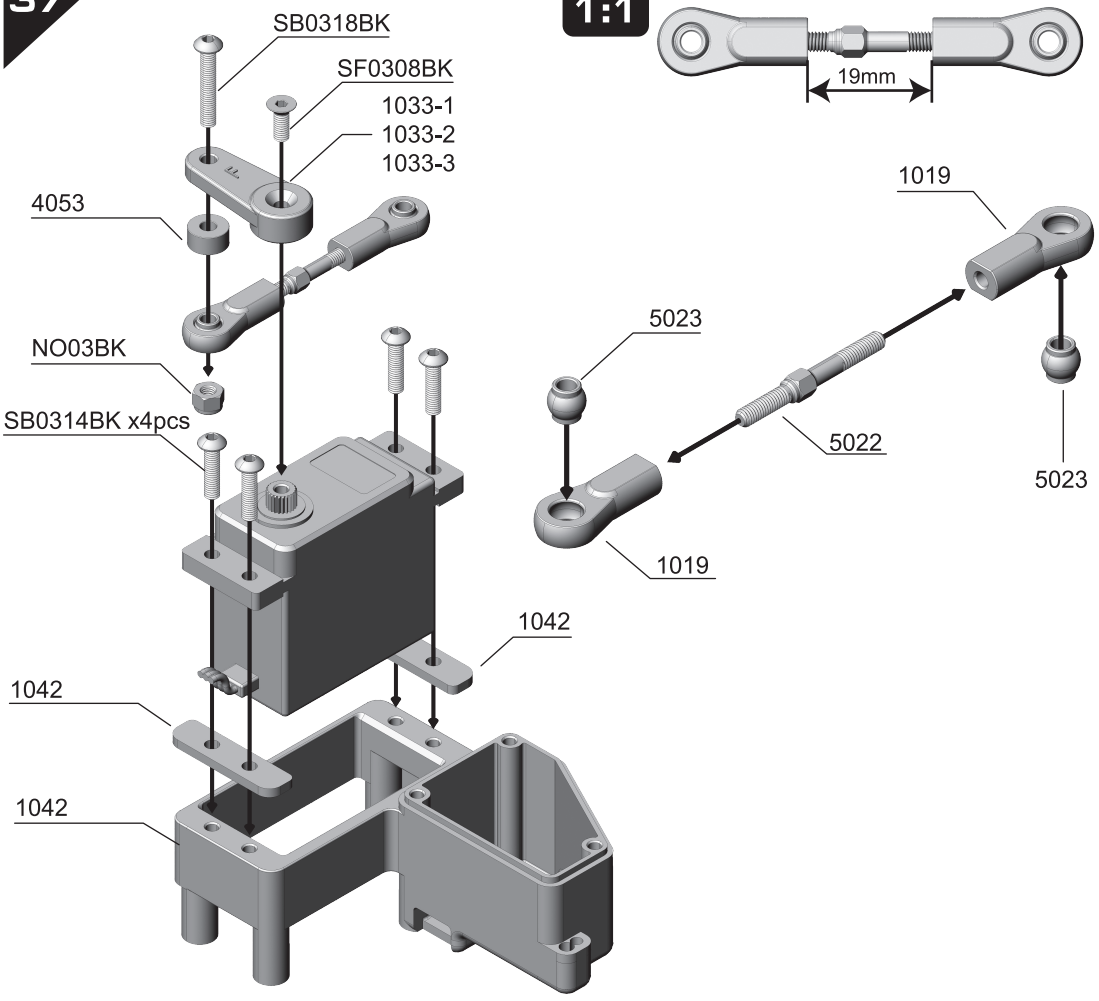

BAG N

SB0310BK
Ball Screw M3x10mm x 1

NO03TBK
Nut Lock M3T x 1

SF0410BK
Flat Screw M4x10mm x 5

SB02505BK
Ball Screw M2.5x5mm x 2

SF0314BK
Flat Screw M3x14mm x 3

38

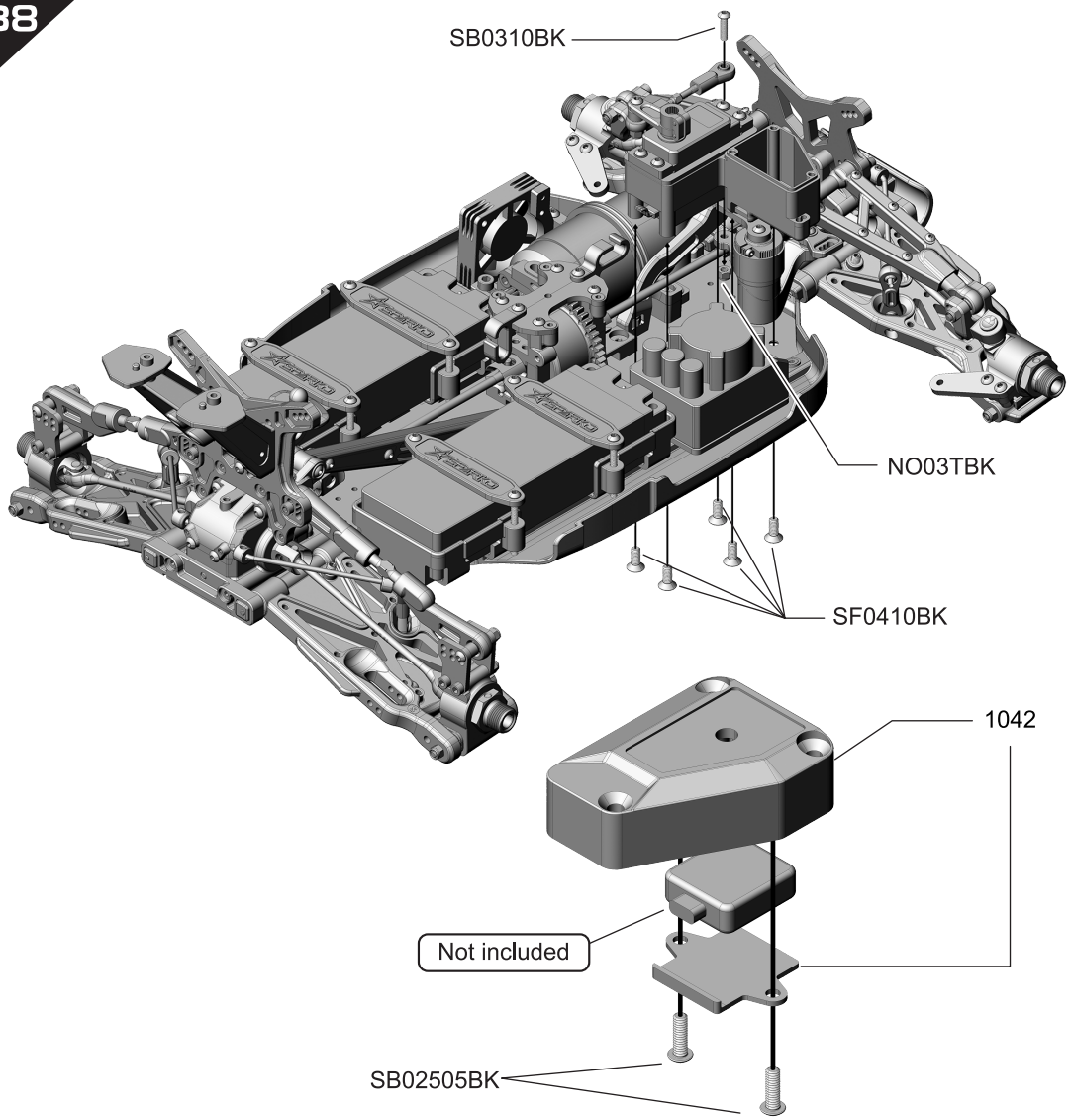

39

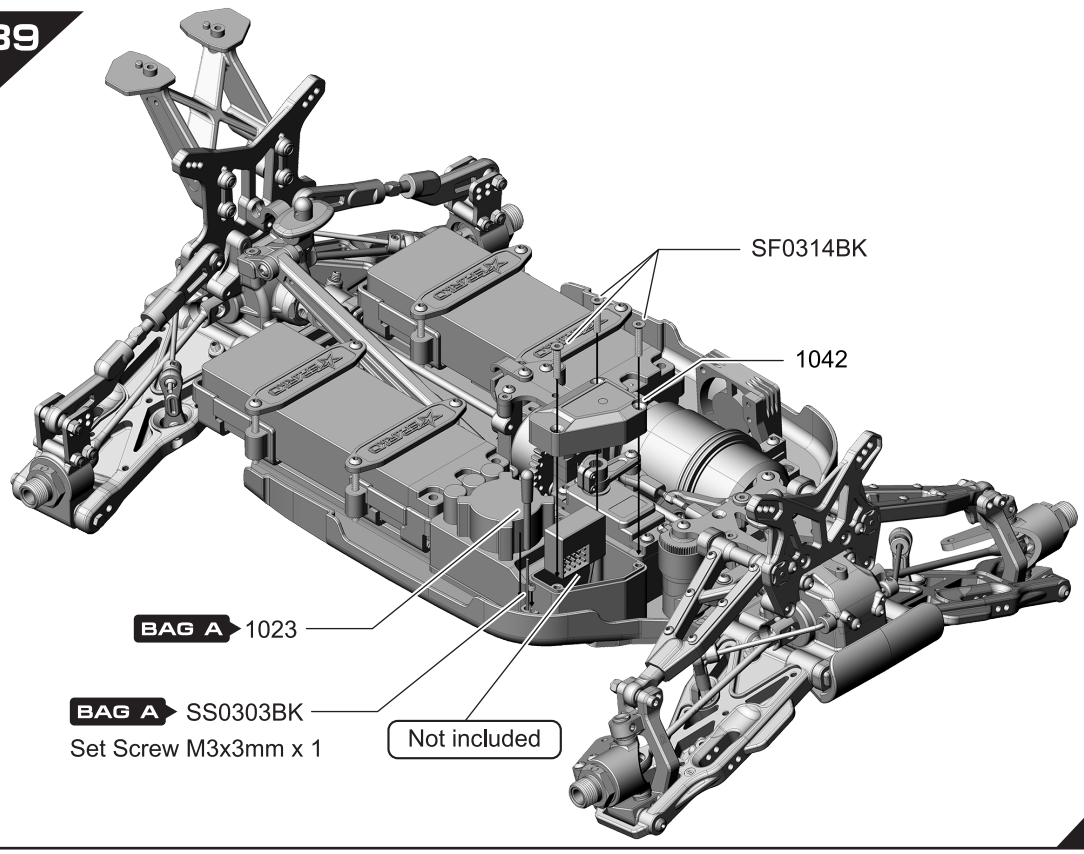

BAG N



5037
Steering Turnduckle
M4x40mm x 2

40

L R x2

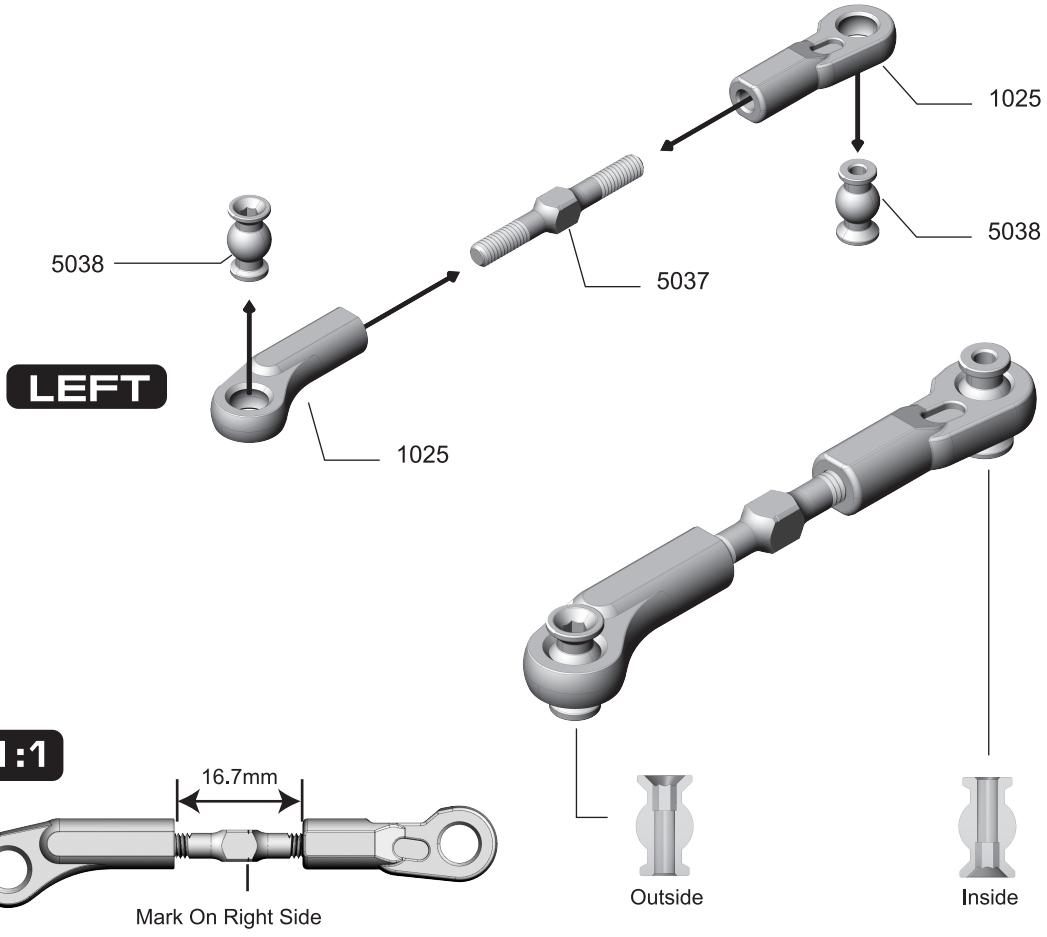



SB0310BK
Ball Screw
M3x10mm x 4

41

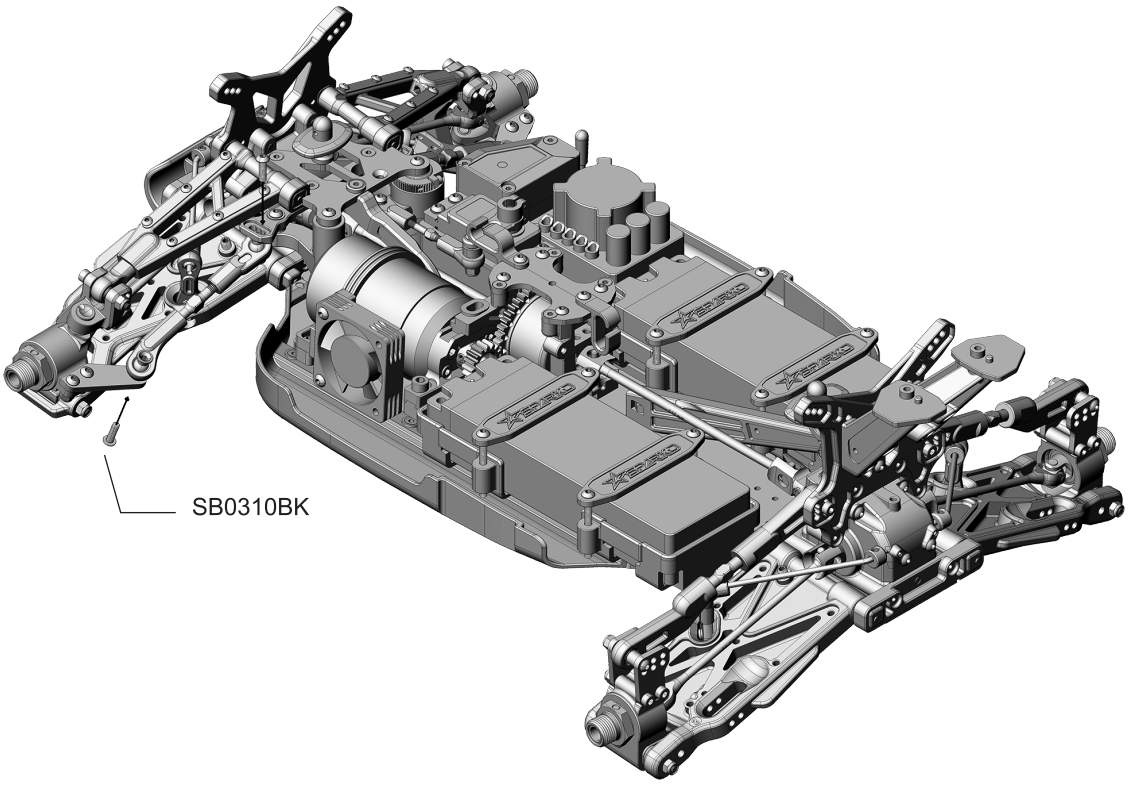

SPARKO
WWW.SPARKORACING.COM

42 F/R x2 FRONT x2 REAR



5040
Front Shock Shaft x 2



5041
Rear Shock Shaft x 2



NO025SL
Nut Lock M2.5mm x 4



WO0260660
Shock Piston Washer
2.6x6x0.6mm x 4



1028
Shock Seal Washer
3.6X7X2.5mm x 8



WO0260660
Shock Piston Washer
2.6x6x0.6mm x 4



1028
Shock Seal O-Ring x 8



2003
Shock seal O-Ring x 4



2004
Shock Spring Adjust
Nut O-Ring x4



SF02046BK 1.5 Hex x 4
Flat Screw M2.0x4.6mm



SB02508BK
Ball Screw
M2.5x8mm x 4



5052-H62
Front Shock Spring (Hard)
(L62 X Ø1.6 mm) x 2



5053-M80
Rear Shock Spring (Med)
(L80 X Ø1.6 mm) x2

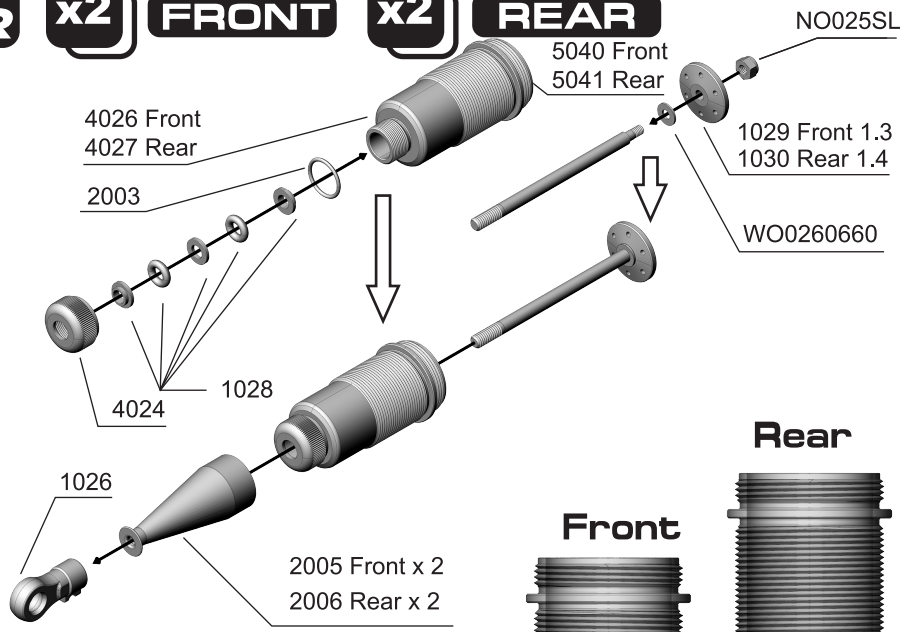

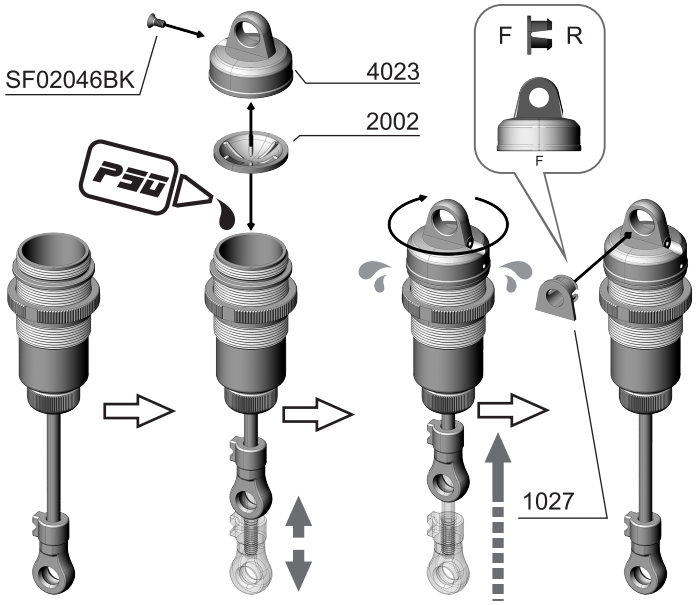

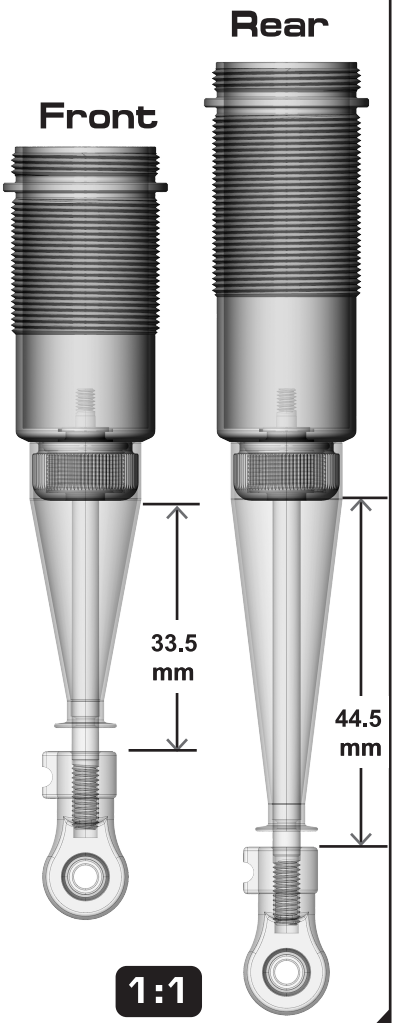

Slowly push and pull the shock shaft around 20 times to release the air bubbles from shock body.

1:1

43

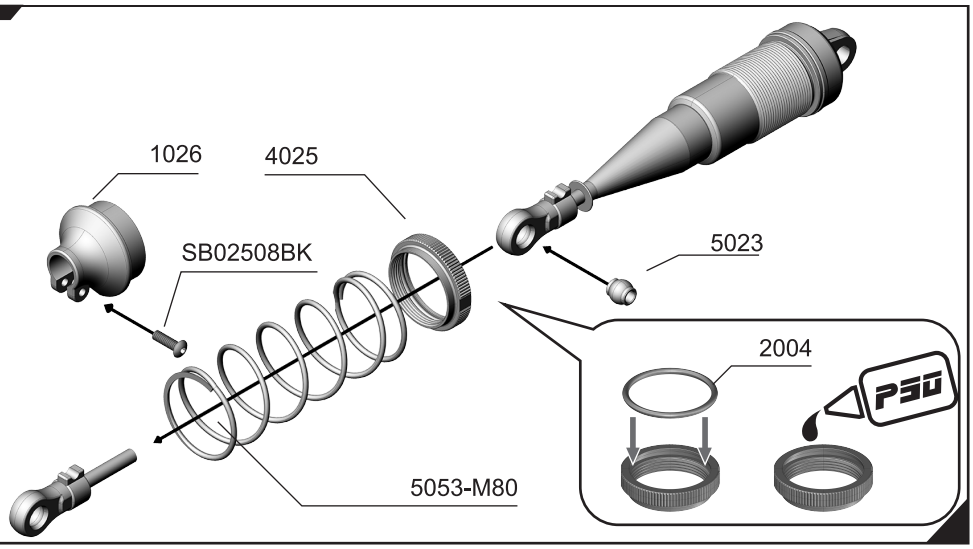

BAG O



SC0328BK
Cap Screw
M3x28mm x 4

44

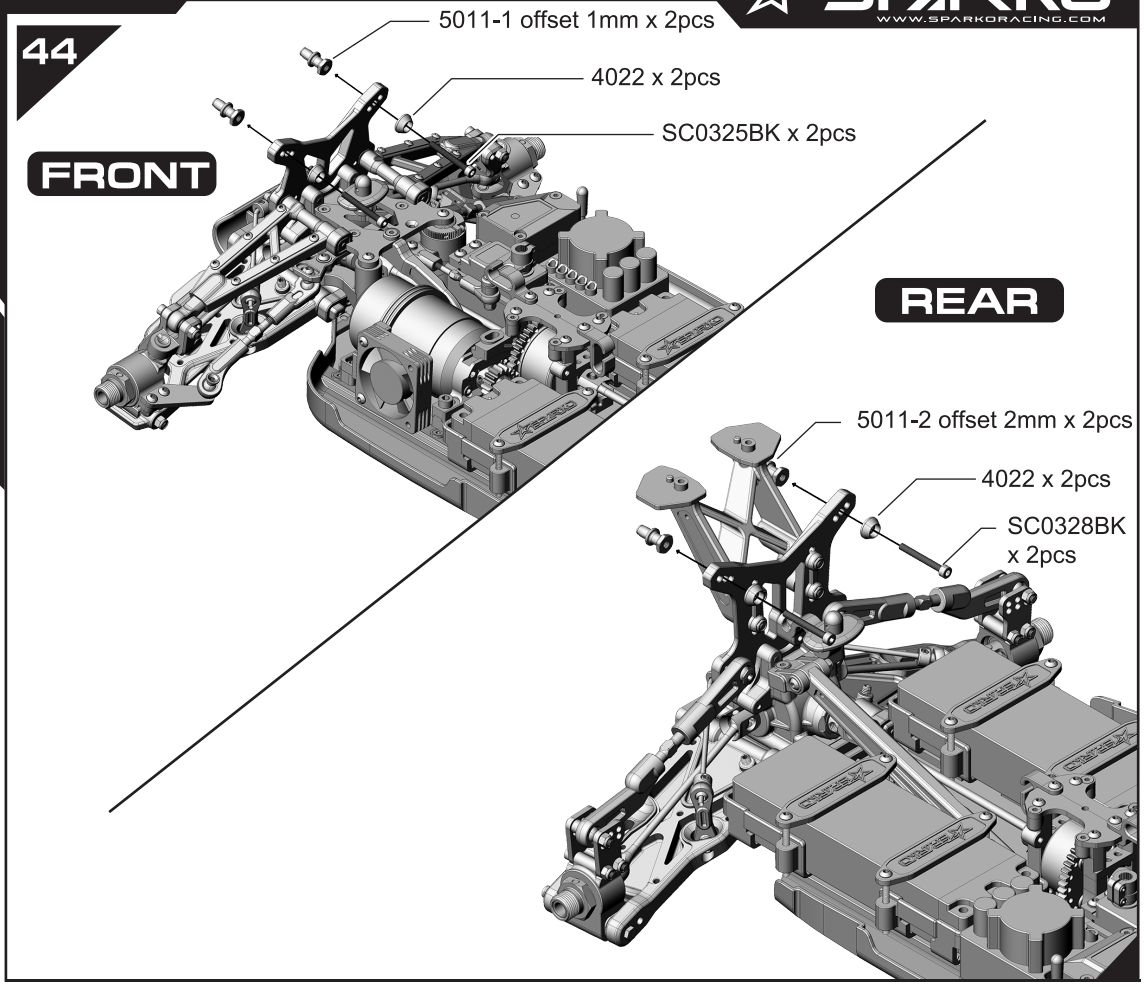



NF03BK
Flanged Locknut
M3 x 4



5019
Shock Pins x 4



SS0404BK
Set Screw
M4x4mm x 4

45

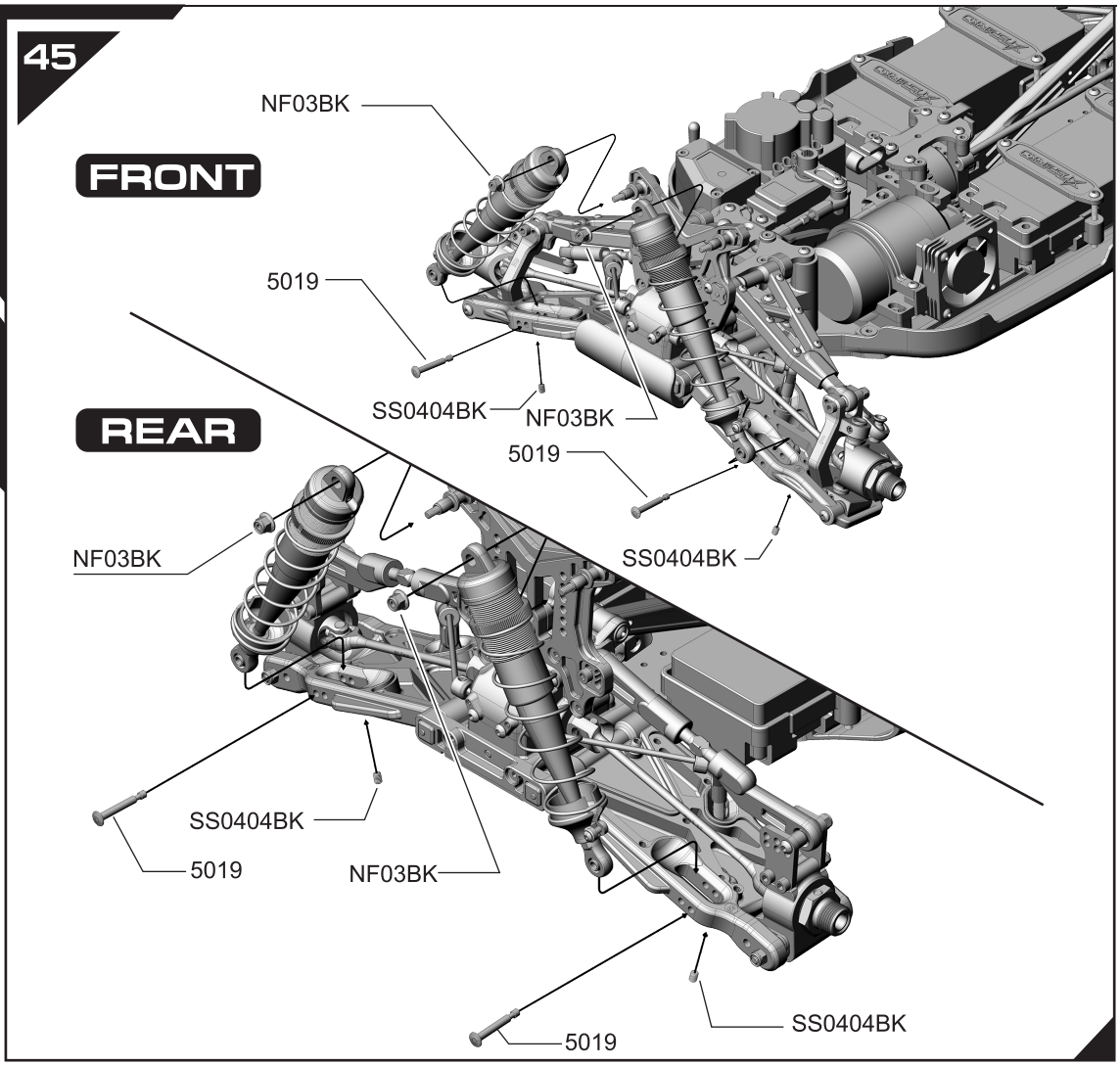



SB02508BK
Ball Screw M2.5x8mm x5

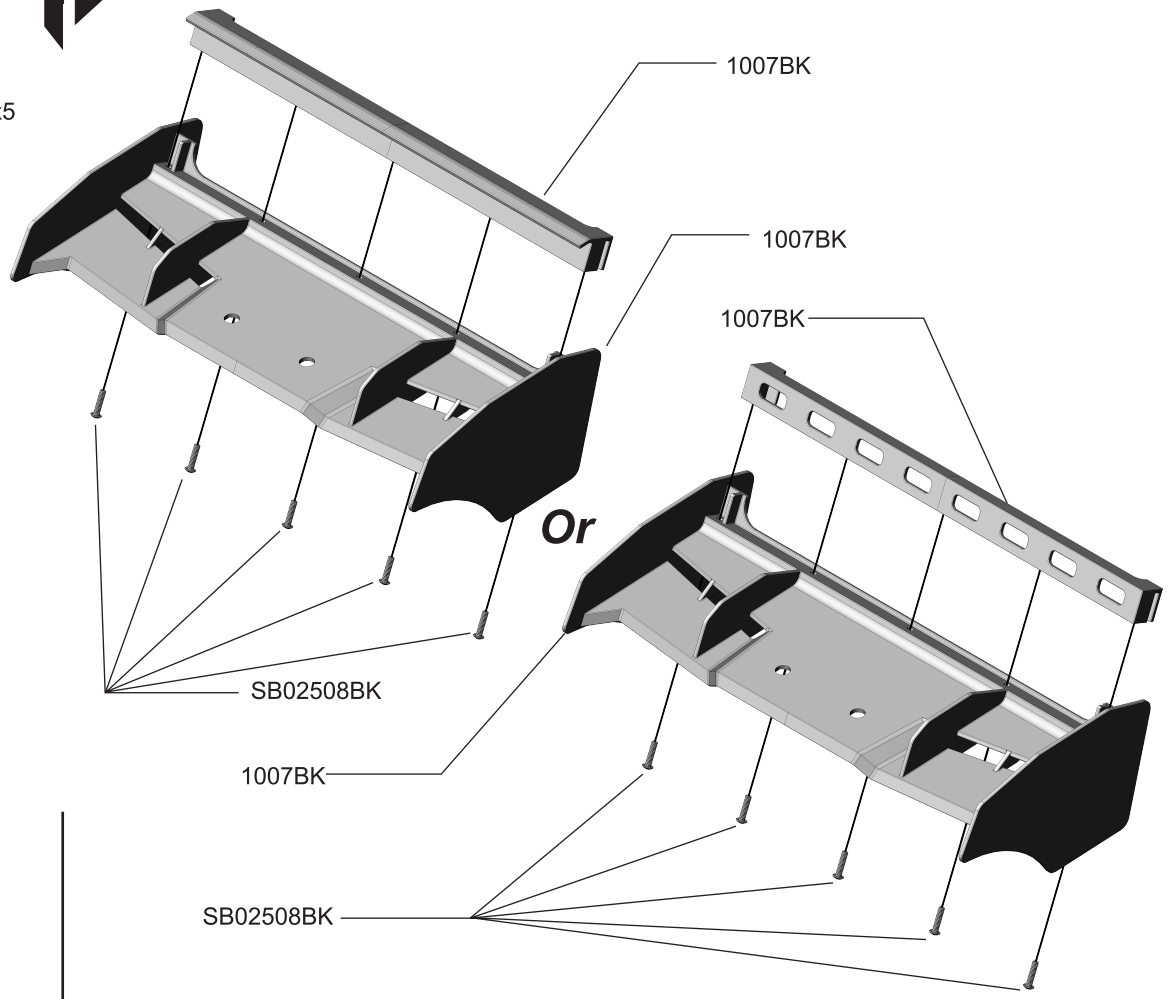



SF0314BK
Flat Screw M3x14mm x 2



NO03BK
Nut Lock M3 x 2

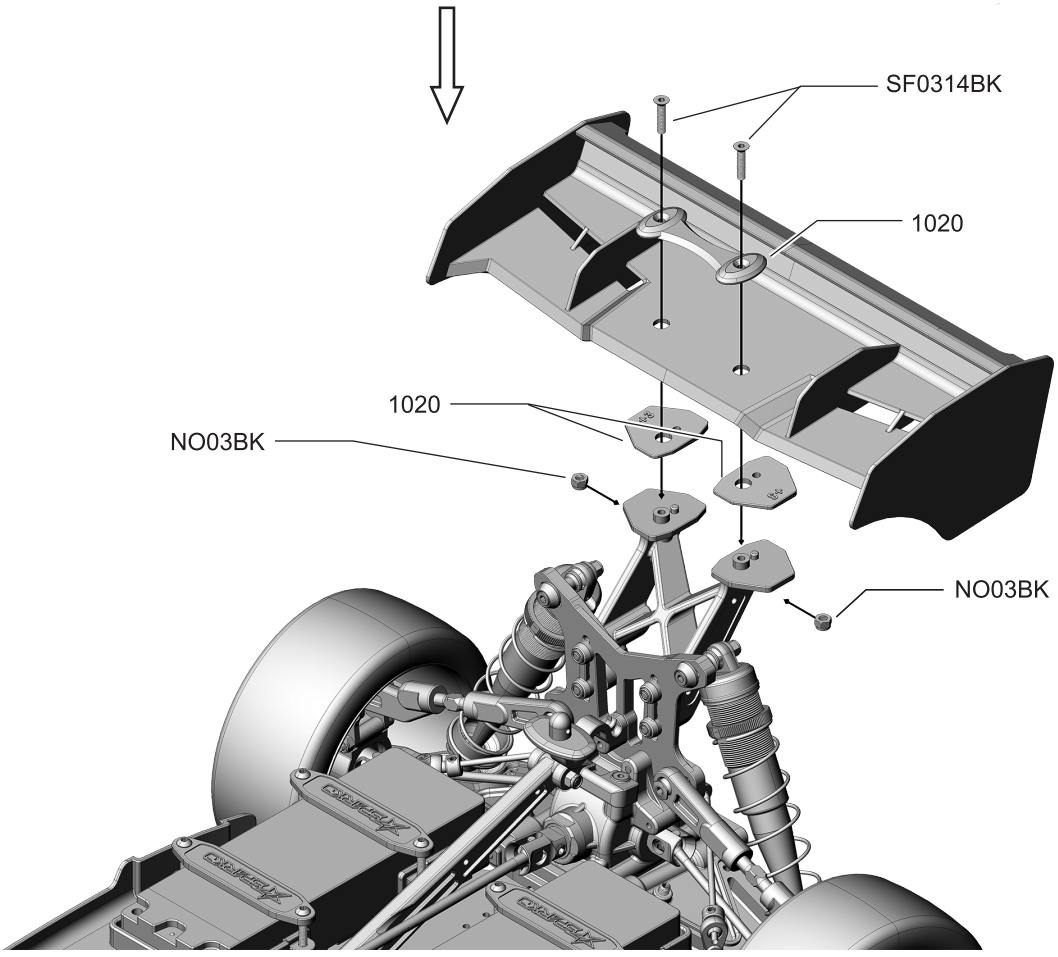

BAG J



4005
Aluminum Wheel Nut
(Hard Anodizing) x 4

47

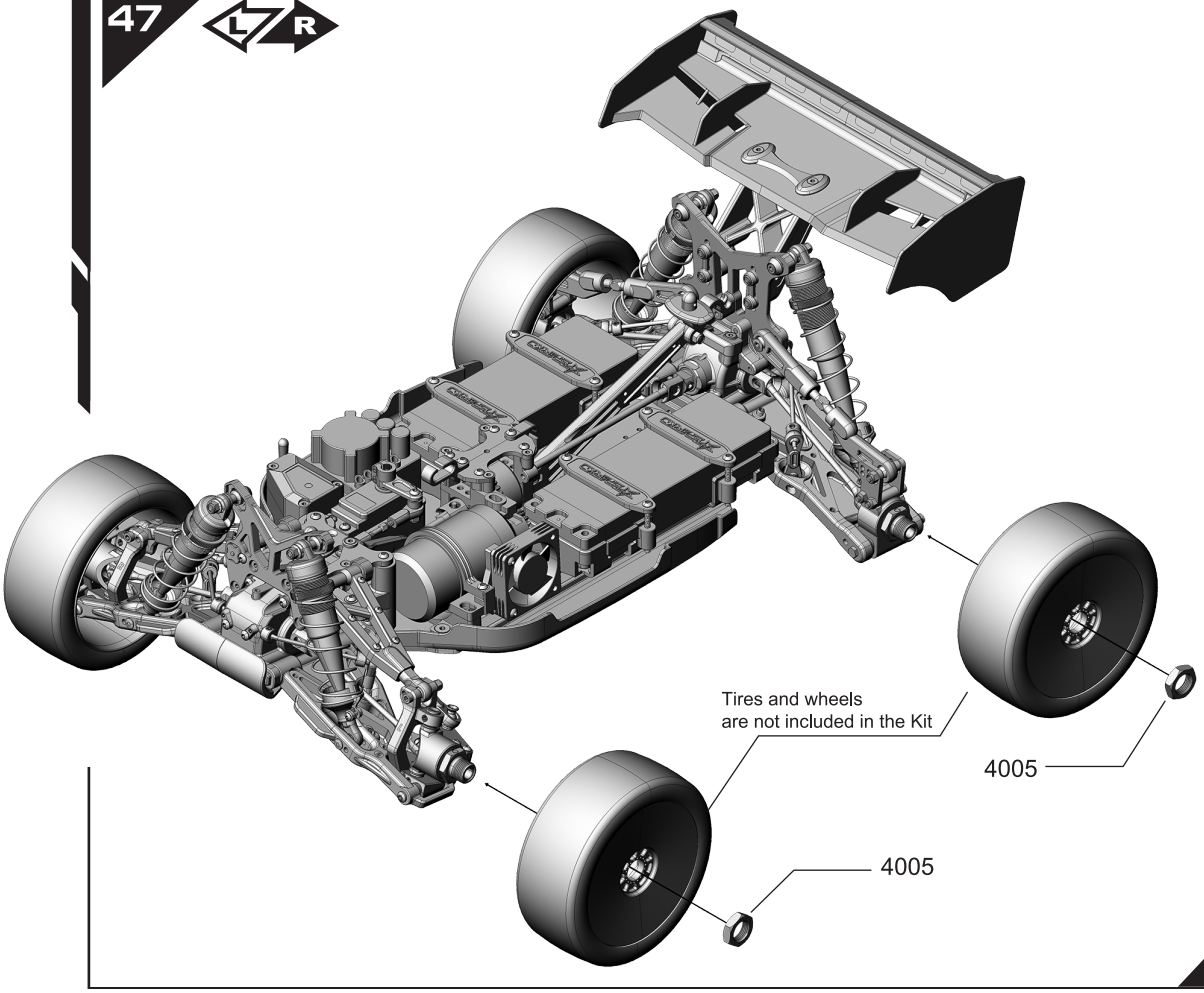

BAG A

48

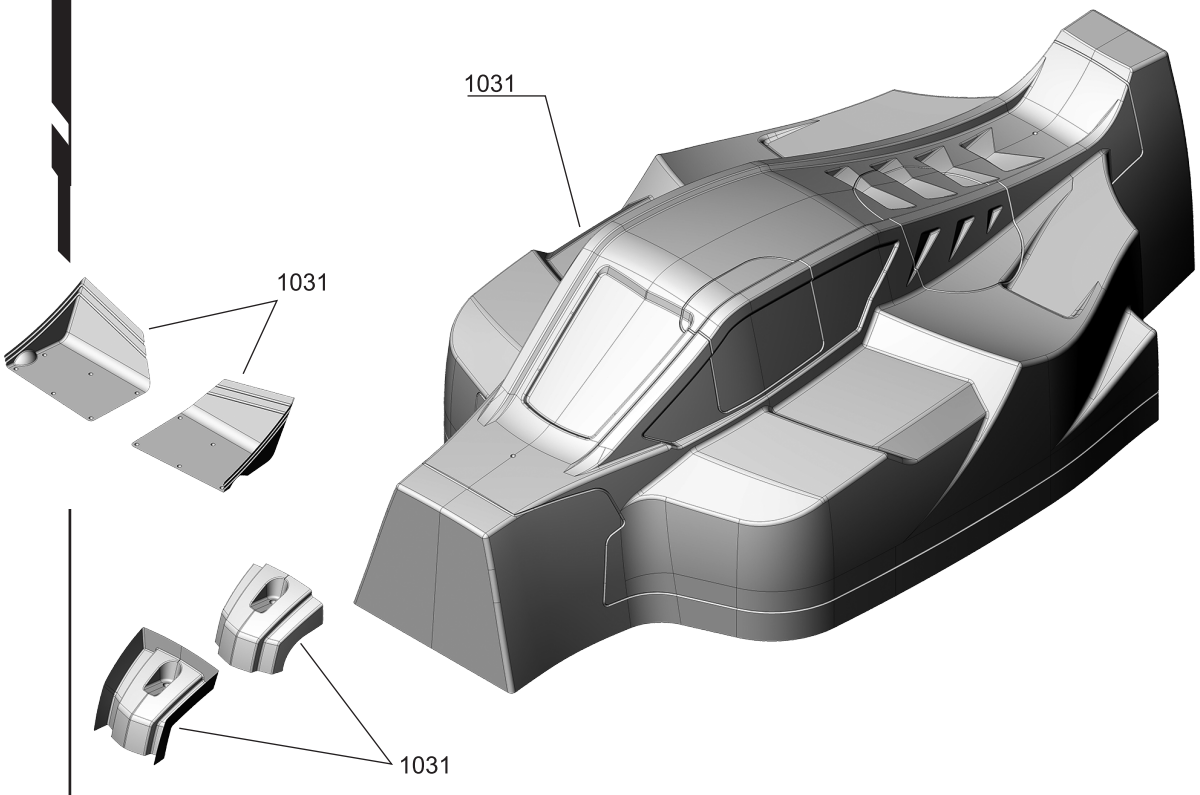

49

Wash and clean the body shell.
Then dry it up.

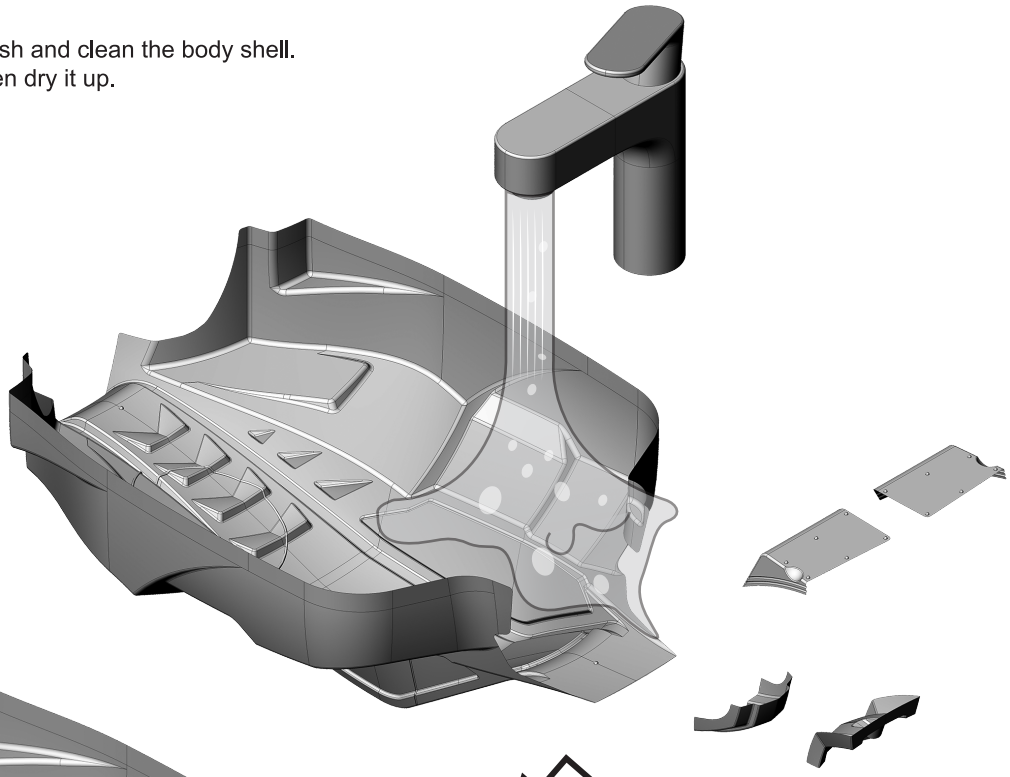

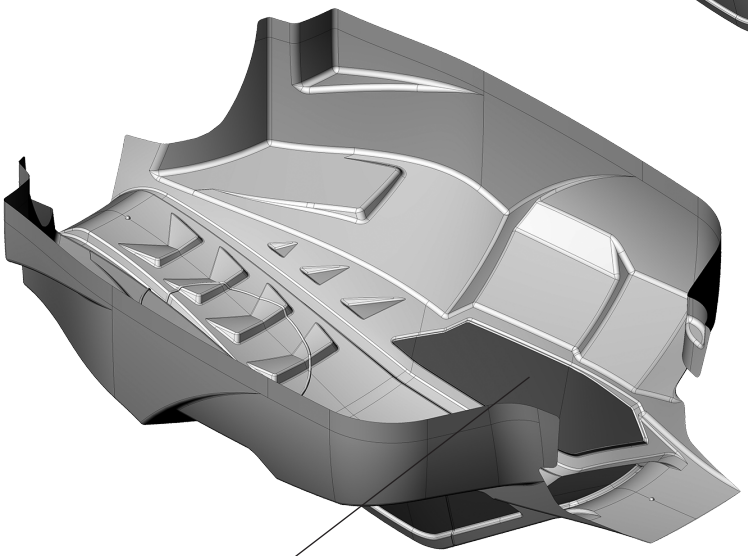

Apply window masks
as shown.

Painting body.

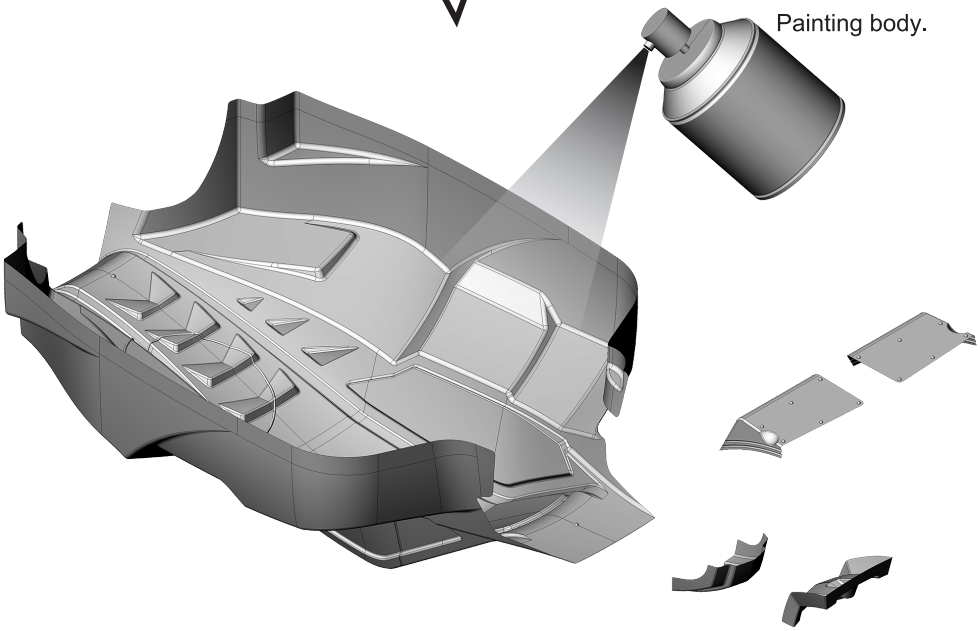

BAG A



SB0308BK
Ball Screw M3x8mm x1

50

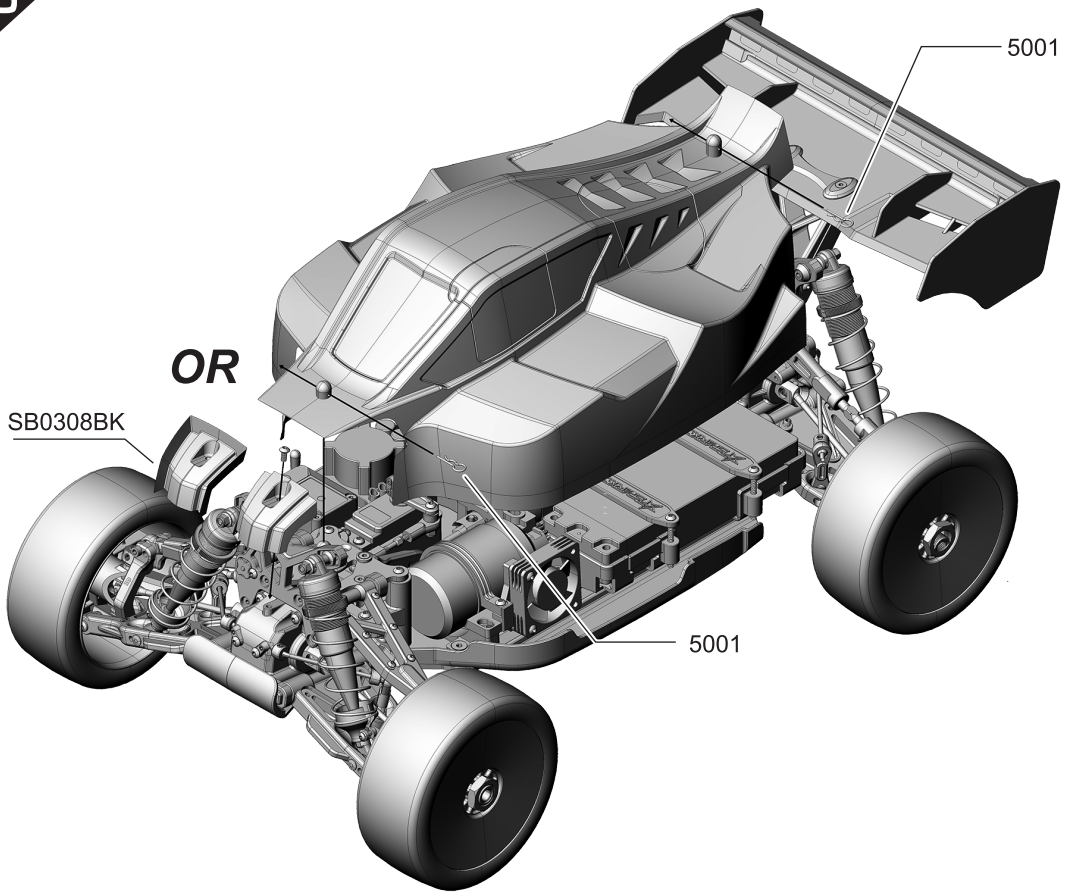

BAG F



SB02505B
Ball Screw M2.5x5mm x 12

51 L R

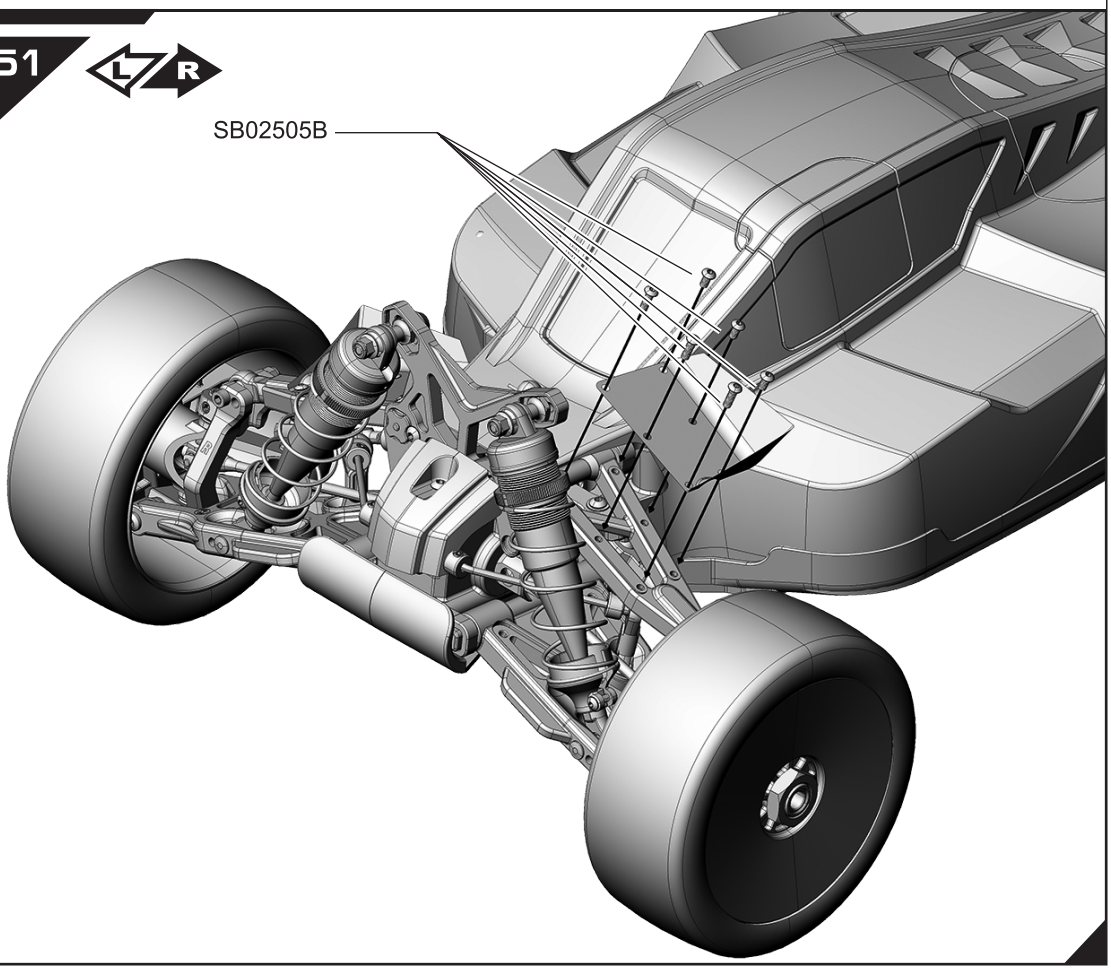

52

4S STANDER BATTERY CONFIGURATION

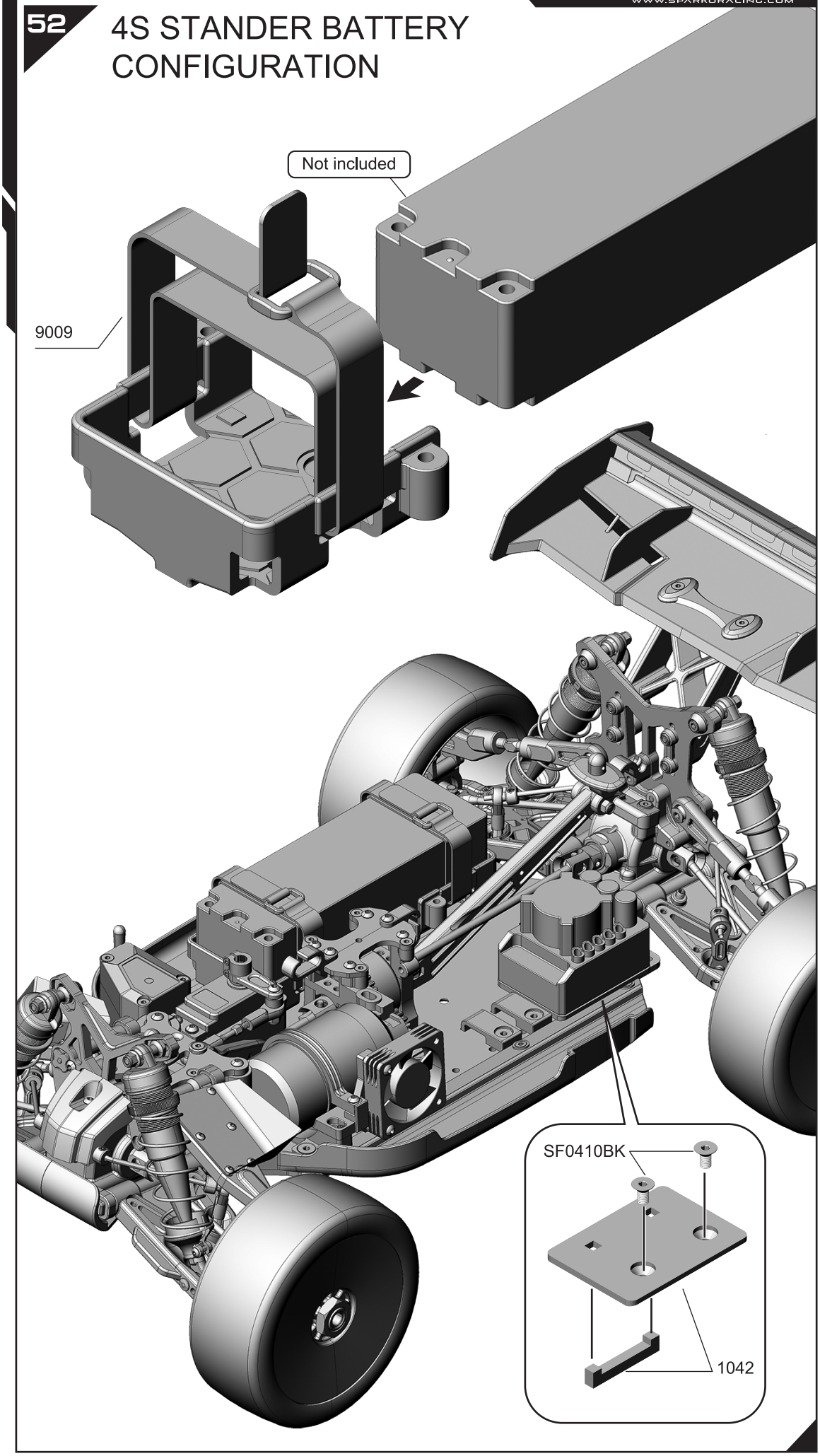

SPARKO
WWW.SPARKORACING.COM

FORMULA EIGHT ELECTRIC SETUP SHEET

Date / /

Name of Driver
FACTORY STANDARD

Track

Size: □ Open ■ Med. □ Tight
Traction: ■ High □ Med. □ Low
Surface: ■ Smooth □ Med. □ Bumpy

ESC	Motor	Battery		Battery Confiquration		Tire	Tire Insert	Wheel	Body
			Shorty : ____ V x ___ Pcs	Shorty □ STF □ STM □ STR	□ Inward □ Outward	Model :			
____ A	____ KV	____ Mah	Standard : ____ V x ___ Pcs	□ SD2 (Stander 2S)		Compounds:			
				□ SD4 (Stander 4S)	□ Outward Only				

● Diff Gear Set-Up

	Front	Center	Rear
Diff. Fluid	# 10000	# 10000	# 5000
	43 x 13 T	46 x 13 T	43 x 13 T

● Shock Set-Up

Cap ■ Bladder □ Emulsion	Front	Rear
Oil Brand: ____	# 600	# 600
Spring Collar Spacer	4.3 mm	6 mm
Pistons	φ 1.3 x 6	φ 1.4 x 6
Spring	H62	M80

● Ride Height

Front	Rear
22 mm	25 mm

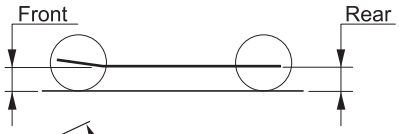

● Rebound

Front	Rear
103 mm	125 mm

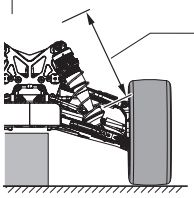

● Camber Angle

Front	Rear
+ – 0 °	+ – 3 °

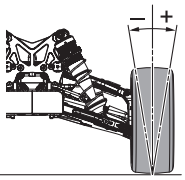

● Wheelbase ____ mm

● Track Width ____ mm

● Shock Mount Position

<Front> <Rear>

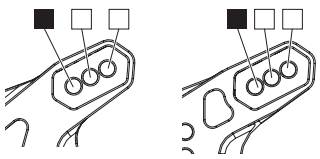

● Rear Upper Arm Position

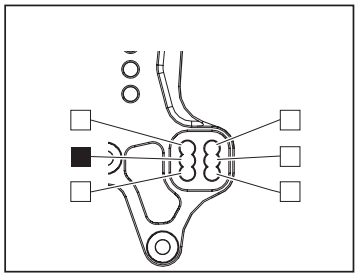

Sus. Arm

Front	□ In	■ Out
Rear	□ In	■ Out

● Rear Hub

■ Plastic
□ Aluminum

Hub Carrier Bush
■ Plastic
□ ____

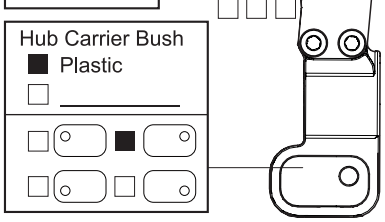

■ 0mm □ 2mm □ 3mm □ 5mm

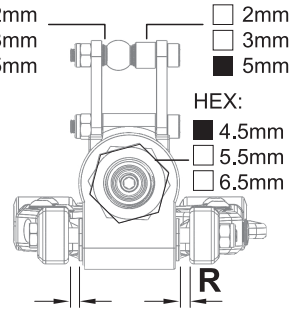

□ 0mm □ 2mm □ 3mm ■ 5mm

2 mm 2 mm

● Arm

Front	Rear
□ Soft	□ Soft
■ Hard (Std.)	■ Hard (Std.)
□ ____	□ ____

● Front Hub Carrier

■ Plastic □ Aluminum
■ 16° □ 20° □ ____ °

● Front Upper Arm

■ A Arm □ Linkage

● Front Upper Arm Position

⊗ Inside holes are not supported at this time.

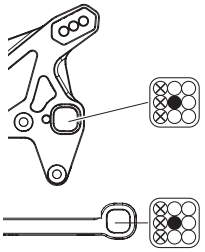

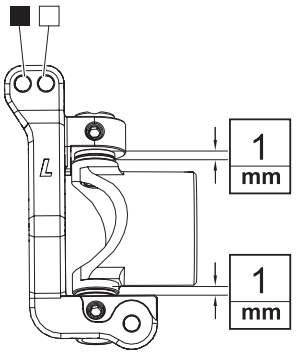

● Toe Angle

Front	
+	°
–	1 °

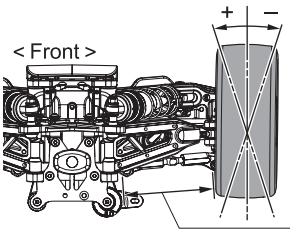

16.7 mm

● Front Toe-In

Inside holes are not supported at this time.



● Rear Toe-In

Inside holes are not supported at this time.



● Steering Plate

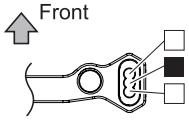

● Sway Bar

Front	Rear
φ 2.5mm	φ 2.8mm
0 mm	0 mm

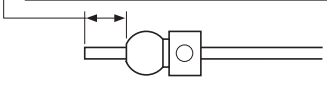

● Wing

□ High Force
■ Holes
□ Without

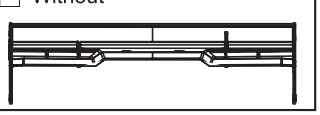

● Wing Position / Angle

□H □M ■L □H □M ■L

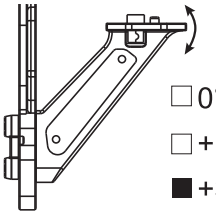

□ 0°
□ +1.5°
■ +3°

Notes

SPARKO
WWW.SPARKORACING.COM

FORMULA EIGHT ELECTRIC SETUP SHEET

Date / /

Name of Driver

Track

Size: □ Open □ Med. □ Tight
Traction: □ High □ Med. □ Low
Surface: □ Smooth □ Med. □ Bumpy

ESC	Motor	Battery		Battery Configuration		Tire	Tire Insert	Wheel	Body
			Shorty : ____ V x ___ Pcs	Shorty □ STF □ STM □ STR	□ Inward □ Outward	Model :			
____ A	____ KV	____ Mah	Standard : ____ V x ___ Pcs	□ SD2 (Stander 2S)		Compounds:			
				□ SD4 (Stander 4S)	□ Outward Only				

● Diff Gear Set-Up

	Front	Center	Rear
Diff. Fluid	#	#	#
	____ x ____T	____ x ____T	____ x ____T

● Shock Set-Up

Cap □ Bladder □ Emulsion	Front	Rear
Oil Brand: _____	#	#
Spring Collar Spacer	mm	mm
Pistons	φ _____x _____	φ _____x _____
Spring		

● Ride Height

Front	Rear
mm	mm

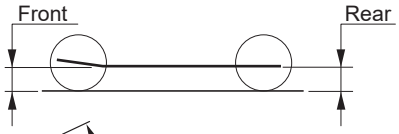

● Rebound

Front	Rear
mm	mm

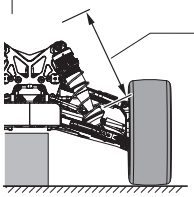

● Camber Angle

Front	Rear
+ ° –	+ ° –

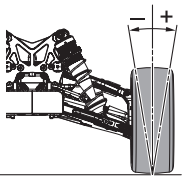

+ Positive Camber
– Negative Camber

● Wheelbase _____ mm

● Track Width _____ mm

● Shock Mount Position

<Front> <Rear>

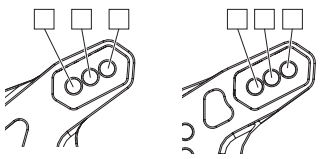

● Rear Upper Arm Position

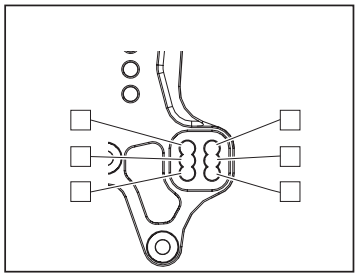

Sus. Arm

Front	□ In	□ Out
Rear	□ In	□ Out

● Rear Hub

□ Plastic
□ Aluminum

Hub Carrier Bush
□ Plastic
□ _____

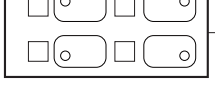

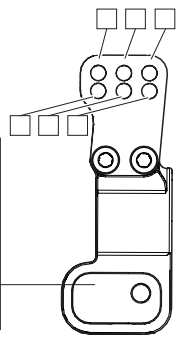

□ 0mm □ 2mm □ 3mm □ 5mm

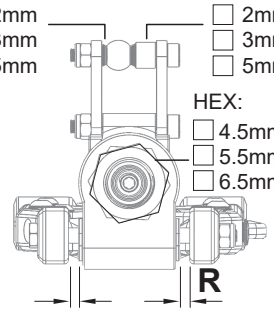

□ 0mm □ 2mm □ 3mm □ 5mm

_____ mm _____ mm

● Arm

Front	Rear
□ Soft	□ Soft
□ Hard (Std.)	□ Hard (Std.)
□ _____	□ _____

● Front Hub Carrier

□ Plastic □ Aluminum
□ 16° □ 20° □ _____ °

● Front Upper Arm

□ A Arm □ Linkage

● Front Upper Arm Position

⊗ Inside holes are not supported at this time.

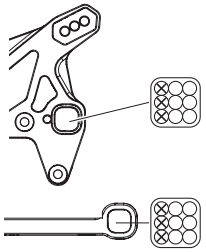

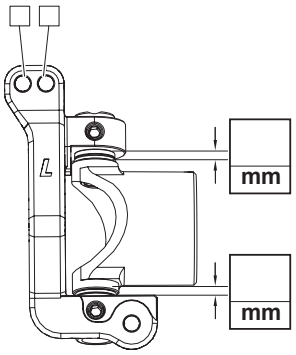

● Toe Angle

Front	
+	°
–	°

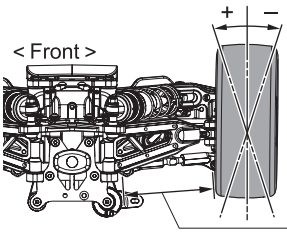

● Front Toe-In ⊗ Inside holes are not supported at this time.



● Rear Toe-In ⊗ Inside holes are not supported at this time.



● Steering Plate

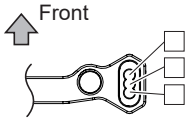

● Sway Bar

Front	Rear
φ	φ
mm	mm



● Wing

□ High Force
□ Holes
□ Without

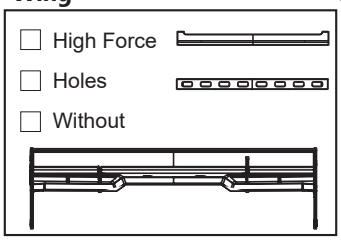

● Wing Position / Angle

□H □M □L □H □M □L

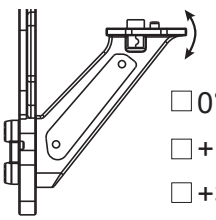

□ 0°
□ +1.5°
□ +3°

Notes

PT No.	ITEM
F80001E	SPARKO F8 1/8 BUGGY KIT(F8E)
F80002	Shock Set for Front (Not Assembled)(2pcs)
F80003	Shock Set for Rear (Not Assembled)(2Pcs)
F80004	Differential Set Center
F80005	Differential Set F/R
F80009	Front Sway Bar Set 2.0/2.3/2.5/2.8mm
F80010	Rear Sway Bar Set 2.4/2.6/2.8/3.0mm
F80011	Front Sway Bar Set 2.0/2.3/2.4/2.5/2.6/2.7/2.8mm (7pcs)
F80012	Rear Sway Bar Set 2.4/2.5/2.6/2.7/2.8/2.9/3.0mm (7pcs)
F81001	Steering Bellcrank Set
F81002	Front Lower Suspension Arms (Left & Right)
F81004A	Front Upper Suspension Arms Set x2
F81005	Sway Bar Ball End Set (4pcs)
F81006	Front Body Mount
F81007BK	1/8 Wing Black
F81007WHOP	1/8 Wing White
F81007YLOP	1/8 Wing Yellow
F81009	Plastic Arm Holder Insert Set (2set)
F81010	Plastic steering Shim 1mm (4pcs)
F81011	F/R Gearbox Set
F81012	F/R Differential Case
F81013	Center Diff. Mount Set x2
F81015	Rear Lower Suspension Arms (Left & Right)
F81016OP	Rear Lower Suspension Arms (Left & Right)(Soft High Tough)
F81017	Rear Hubs & Insert Set x2
F81018	Bearing Spacers (4pcs)
F81019	Rear Upper Arm Linkage Ball End Set x2
F81020	Tall Wing Mount
F81021	Front Bumper (2pcs)
F81022	Rear Body Mount
F81023	Antenna Tube Set
F81025	Front Steering Linkage Ball End Set x2
F81026	Spring Cups & Shock Rod Ends Set x2
F81027	Shock Cap Bushings (4pcs)
F81028	CNC Delrin Shock Cartridge Set x2
F81029	Big Bore Tapered Shock Piston 6x1.3mm (2pcs)
F81030	Big Bore Tapered Shock Piston 6x1.4mm (2pcs)
F81031	Buggy Body /Decal Sheets(Clear)
F81032	Center Differential Case
F81033	Servo Horn Set
F81034	Chassis Brace Set
F81035	Rear Upper Arm Linkage Ball End Short x 4
F81036OP	Front Lower Suspension Arms (Left & Right)(Soft High Tough)
F81037OP	Front Upper Suspension Arms Set x2(Soft High Tough)
F81038OP	Tall Wing Mount(Soft High Tough)
F81039	Sterring servo Ball End(2pcs)
F81040OP	CNC Rear Hub Insert
F81041OP	CNC POM Servo Horn Insert for Throttle (4pcs)
F81042	Receiver Box (F8E)
F81043	Side Guards(F8E)
F81044	Battery Box 2et
F82001	Differential O-Rings (6pcs)
F82002	Shock Bladder (2pcs)
F82003	Shock seal O-Rings (4pcs)
F82004	Shock Spring Adjust Nut O-Ring (4pcs)
F82005	Shock Boots Front (4pcs)
F82006	Shock Boots Rear (4pcs)
F82007OP	Dustproof Bush for Receiver Box Set x2
F82008OP	Shock Emulsion (4pcs)
F83001-30	Carbon Fiber Steering Knuckle Plate(R=L) 3.0mm (2pcs)
F83002-15	Carbon Fiber Front Upper Arm Inserts (R=L) 1.5mm (4pcs)
F83002-20OP	Carbon Fiber Front Upper Arm Inserts (R=L) 2.0mm (4pcs)
F83003-30	Carbon Fiber Front Top Plate 3.0mm
F83005-25	Carbon Rear Hub Link 2.5mm (4pcs)

PT No.	ITEM
	(Dark Blue)
F83006-15OP	Carbon Front Arm covers 1.5mm - 2pcs
F83006-20OP	Carbon Front Arm covers 2.0mm - 2pcs
F83007-15OP	Carbon Rear Arm covers 1.5mm - 2pcs
F83007-20OP	Carbon Rear Arm covers 2.0mm - 2pcs
F83008-15OP	Carbon Rear Brace covers 1.5mm - 2pcs
F83008-20OP	Carbon Rear Brace covers 2.0mm - 2pcs
F83009-15OP	Carbon Wing Mount covers 1.5mm - 2pcs
F83009-20OP	Carbon Wing Mount covers 2.0mm - 2pcs
F83011-15OP	Carbon wing Mount Cover
F83012	Carbon Fiber Center Diff. Plate 2.5mm(F8E)
F83013	Carbon Fiber Front Shock Tower 4.5mm
F83014	Carbon Fiber Rear Shock Tower 4.5mm
F83015	Carbon Rear Hub Link 3.0mm (4pcs)
F83016	Carbon Fiber Steering Knuckle Plate 4 holes (R=L) 3.0mm (2pcs)
F84001	7075 Aluminum Steering Bellcrank
F84003	Aluminum Servo Saver Post (Hard Anodizing)
F84004	Aluminum Servo Saver Nut with Screw Fixed
F84004-BG	Aluminum Servo Saver Nut with Screw Fixed (Blue Ggrey)
F84005	Aluminum Wheel Nut(Hard Anodizing) (4pcs)
F84006	Aluminum Wheel Hub Axil(L4.5mm)17mm(Hard Anodizing)(2pcs)
F84007	7075 Aluminum Arm Mount A(Dark Blue)
F84008	7075 Aluminum Upper Link Mount (Dark Blue)
F84009	7075 Aluminum Front Shock Tower (Dark Blue)
F84010	Aluminum Adjuster Knob 8mm (4pcs)
F84011	7075 Aluminum Steering Block
F84012	7075 Aluminum Caster Block (Left & Right)(16°)
F84013-1	Shock Ball Stud Offset 1mm for Front (2pcs)
F84013-2	Shock Ball Stud Offset 2mm for Rear (2pcs)
F84014	7075 Aluminum Arm Mount B(Dark Blue)
F84015	7075 Aluminum Arm Mount C(Dark Blue)
F84016	Pinion Gear Stopper 5x7x5.1mm (4pcs)
F84018	7075 Aluminum Rear Shock Tower (Dark Blue)
F84019	7075 Aluminum Arm Mount D(Dark Blue)
F84022	Aluminum Shock Tower Washers (Titanium Color)
F84023	7075 Aluminum Shock Caps (Dark Blue) (2pcs)
F84024	7075 Aluminum Shock Body Seal Retainer (Dark Blue) (2pcs)
F84025	7075 Aluminum Spring Collars (2pcs)
F84026	7075 Aluminum Front Shock Body (Hard Anodizing)(2pcs)
F84027	7075 Aluminum Rear Shock Body (Hard Anodizing)(2pcs)
F84029OP	7075 Aluminum Front Brace (Dark Blue)
F84030OP	7075 Aluminum Rear Brace (Dark Blue)
F84031OP	7075 Aluminum Steering Blocker (Dark Blue)
F84032OP	7075 Aluminum Caster Block (Left & Right)(20°)
F84034OP	7075 Aluminum Arm Mount D +1 (Dark Blue)
F84036OP	7075 Aluminum Servo Horn Steering-25T (Dark Blue)
F84037OP	7075 Aluminum Center Diff. Mount
F84038OP	7075 Aluminum Rear Hub CNC POM Carrier Set(Dark Blue)
F84039OP	Rear Hubs adjust washer 2mm/3mm
F84040OP	Aluminum wheel Nut (L5.5mm)
F84041OP	Aluminum wheel Nut (L6.5mm)
F84042OP	Upper Arm Linkage conversion kits
F84043	Motor Ring Mount (F8E)
F84044	7075 Aluminum Motor Mount B (F8E)
F84045	7075 Aluminum Motor Mount C (F8E)
F84046	7075 Center Diff. Mount (F8E)
F84047	7075 Aluminum Motor Mount A (F8E)
F84048	7075 Fan Mount (F8E)
F84049	7075 Aluminum Steering Bellcrank (F8E)
F84050	7075 Aluminum Chassis (Hard Anodizing) (F8E)
F84051	7075 Aluminum Steering Plate(F8E)
F84052	7075 Aluminum Front Brace (Dark Blue) (F8E)
F84053	Adjust washer 4mm x4
F84054OP	7075 17mm Aluminum Covered Serrated Wheel Nut (Dark Blue)4PCS
F85001	Body Clip(10pcs)

PT No.	ITEM
F85002	Sevro Saver Spring(1pcs)
F85003	Sevro Saver Shaft(2pcs)
F85004	Universal Cross Drive Shaft Set (92.5mm)
F85005	Pin M3.0x16.8mm (4pcs)
F85006	Rear Upper Arm Ball Stud (7mm) (4pcs)
F85007	Lower Arm Hinge Pin(70mm)(2pcs)
F85008	Upper Arm Hinge Pin(43mm)(2pcs)
F85009	Upper Arm Adjustment Screw(2pcs)
F85010	Sway Bar Ball Stud(4pcs)
F85011OP	Steel Shock Ball Stud 0 Offset for Front/Rear (2pcs)
F85012	Hard Front Lower Suspension Shaft Screw (2pcs)
F85013	Spindle Carrier Hinge Insert (4pcs)
F85014	Spindle Carrier Hinge Pins (4pcs)
F85015	Differential Outdrive (2pcs)
F85016	Center Differential Outdrives (2pcs)
F85017	Front/Rear Differential Outdrives (2pcs)
F85018	Internal Differential Gear Set (4+2pcs)
F85019	Shock Pins (4)
F85020	Differential Cross Pins (6pcs)
F85021	Pin M2.2x9.8mm (4pcs)
F85022	Sevro Steering Turnbuckle M3x30mm (2pcs)
F85023	Shock Ball Stud 6xL6.7mm (4pcs)
F85031	Up Arm Linkage Ball Stud (7mm) (4pcs)
F85032	Rear Outter Hinge Pins (2pcs)
F85033	Camber Turnbuckle 5x45mm (2pcs)
F85034	Rear Upper Arm Ball Stud 7.0mm Hex (4pcs)
F85037	Steering Turnbuckle M4x40mm (2pcs)
F85038	Steering Turnbuckle Ball Set (4pcs)
F85039	防刮片 *2PCS
F85040	Front Shock Shaft (2pcs)
F85041	Rear Shock Shaft (2pcs)
F85042	Hex Shanked Button M3x13.7mm (4pcs)
F85043	Down Stop Screw M4x10mm(4pcs)
F85046-46	Center Gear 46T with Differential Seal
F85047-43	Crown Gear 43T with Differential Seal
F85048-13	Pinion Gear13T
F85050-20OP	Front Sway Bar 2.0mm
F85050-23	Front Sway Bar 2.3mm
F85050-24OP	Front Sway Bar 2.4mm
F85050-25	Front Sway Bar 2.5mm
F85050-26OP	Front Sway Bar 2.6mm
F85050-27OP	Front Sway Bar 2.7mm
F85050-28OP	Front Sway Bar 2.8mm
F85051-24OP	Rear Sway Bar 2.4mm
F85051-25OP	Rear Sway Bar 2.5mm
F85051-26	Rear Sway Bar 2.6mm
F85051-27OP	Rear Sway Bar 2.7mm
F85051-28	Rear Sway Bar 2.8mm
F85051-29OP	Rear Sway Bar 2.9mm
F85051-30OP	Rear Sway Bar 3.0mm
F85052-H62	Shock Spring for Front Hard L=62mm(2pcs)
F85052-M62OP	Shock Spring for Front Medium L=62mm(2pcs)
F85052-S62OP	Shock Spring for Front Soft L=62mm(2pcs)
F85053-H80OP	Shock Spring for Rear Hard L=80mm (2pcs)
F85053-M80	Shock Spring for Rear Medium L=80mm (2pcs)
F85053-S80OP	Shock Spring for Rear Soft L=80mm (2pcs)
F85054	Center Rear Dogbone 118.2mm(F8E)
F85055	Center Rear Dogbone 97.2mm(F8E)
F85056-13OP	Motor Gear 13T, 5mm(F8E)
F85056-14OP	Motor Gear 14T, 5mm(F8E)
F85056-15	Motor Gear 15T, 5mm(F8E)
F85056-16OP	Motor Gear 16T, 5mm(F8E)
F85056-17OP	Motor Gear 17T, 5mm(F8E)
F85056-18OP	Motor Gear 18T, 5mm(F8E)

PT No.	ITEM
F85056-19OP	Motor Gear 19T, 5mm(F8E)
F85056-20OP	Motor Gear 20T, 5mm(F8E)
F89001	Servo Spring Dusty Protect Sponge(2pcs)
F89002	Differential Seals Set (2+1)
F89004-BK	Body Sticker-Black and White
F89004-PKOP	Body Sticker-Pink for Optional
F89004-OGOP	Body Sticker-Orange for Optional
F89004-YLOP	Body Sticker-Yellow for Optional
F89005-BK	Wing Sticker-Black and White
F89005-PKOP	Wing Sticker-Pink for Optional
F89005-OGOP	Wing Sticker-Orange for Optional
F89005-YGOP	Wing Sticker-Yellow for Optional

PT No.	ITEM
BF030625	Flange Ball Bearing 3x6x2.5mm (4pcs)
BO050825	Ball Bearing 5x8x2.5mm (4pcs)
BO051004	Ball Bearing 5x10x4mm (4pcs)
BO051304	Ball Bearing 5x13x4mm (4pcs)
BO061003	Ball Bearing 6x10x3mm (4pcs)
BO081605	Ball Bearing 8x16x5mm (4pcs)
NF03BK	Flanged Locknut M3 (10pcs)
NO025SL	Nut Lock M2.5mm (10pcs)
NO03BK	Nut Lock M3 (10pcs)
NO03TBK	Nut Lock M3T (10pcs)
NO04BK	Nut Lock M4 (10pcs)
NO03TBK	Nut Lock M3T (10pcs)
SB02505BK	Ball Screw M2.5x5mm (10pcs)
SB02508BK	Ball Screw M2.5x8mm (10pcs)
SB0305BK	Ball Screw M3x5mm (10pcs)
SB0306BK	Ball Screw M3x6mm (10pcs)
SB0308BK	Ball Screw M3x8mm (10pcs)
SB0310BK	Ball Screw M3x10mm (10pcs)
SB0312BK	Ball Screw M3x12mm (10pcs)
SB0314BK	Ball Screw M3x14mm (10pcs)
SB0315BK	Ball Screw M3x15mm (10pcs)
SB0316BK	Ball Screw M3x16mm (10pcs)
SB0320BK	Ball Screw M3x20mm (10pcs)
SB0323BK	Ball Screw M3x23mm (10pcs)
SB0325BK	Ball Screw M3x25mm (10pcs)
SC0206BK	Cap Screw M2x6mm (10pcs)
SC0308BK	Cap Screw M3x8mm (10pcs)
SC0310BK	Cap Screw M3x10mm (10pcs)
SC0312BK	Cap Screw M3x12mm (10pcs)
SC0316BK	Cap Screw M3x16mm (10pcs)
SC0322BK	Cap Screw M3x22mm (10pcs)
SC0323BK	Cap Screw M3x23mm (10pcs)
SC0325BK	Cap Screw M3x25mm (10pcs)
SC0328BK	Cap Screw M3x28mm (10pcs)
SF02046BK	Flat Screw M2.0x4.6mm 1.5 Hex (10pcs)
SF0306BK	Flat Screw M3x6mm (10pcs)
SF0308BK	Flat Screw M3x8mm (10pcs)
SF0310BK	Flat Screw M3x10mm (10pcs)
SF0312BK	Flat Screw M3x12mm (10pcs)
SF0314BK	Flat Screw M3x14mm (10pcs)
SF0335BK	Flat Screw M3x35mm (10pcs)
SF0408BK	Flat Screw M4x8mm (10pcs)
SF0410BK	Flat Screw M4x10mm (10pcs)
SF0414BK	Flat Screw M4x14mm (10pcs)
SF0416BK	Flat Screw M4x16mm (10pcs)
SS0303BK	Set Screw M3x3mm Set (10pcs)
SS0304BK	Set Screw M3x4mm Set (10pcs)
SS0404BK	Set Screw M4x4mm Set (10pcs)
SS0504BK	Set Screw M5x4mm Set (10pcs)
WO0260660	Shock Piston Washer 2.6x6x0.6mm (10pcs)
WO030801	Shim 3x8x1mm (10pcs)
WO030510	Shim 3x5x0.1mm (10pcs)
WO0351020	Differential Shim 3.5x10x0.2mm (12pcs)
WO050840	Shim 5x8xT0.4mm (10pcs)
WO050880	Shim 5x8xT0.8mm Shim (10pcs)
WO051230	Differential Shim 5x12x0.3mm (6pcs)
WO060830	Shim 6x8x0.3mm (10pcs)
WO081020	Hex Shim 8x10x0.2mm (10pcs)
WO131620	Differential Shim 13x16x0.2mm (10pcs)
WS0305510	Spring Washer M3x5.5x1mm(10pcs)

F8d

FORMULA EIGHT ELECTRIC



SPARKO

WWW.SPARKORACING.COM

V3-202502201ZZ